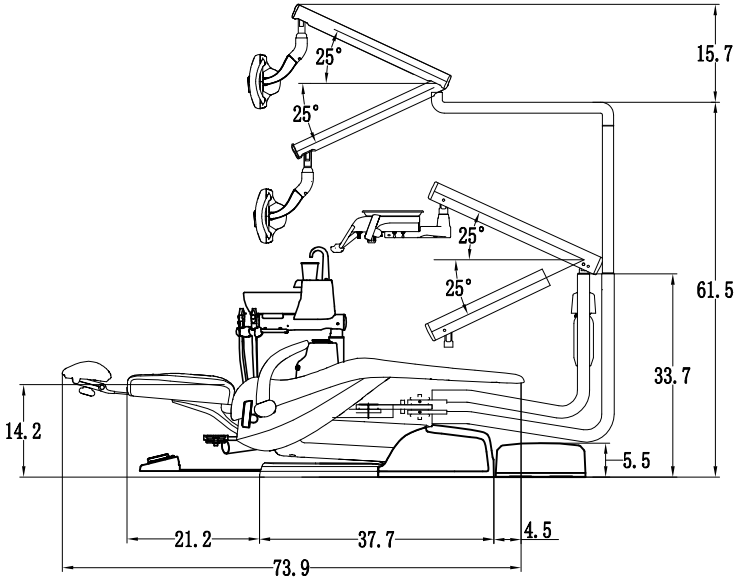
25°
25°
25°
25°
15.7
61.5
33.7
14.2
5.5
21.2
37.7
4.5
73.9

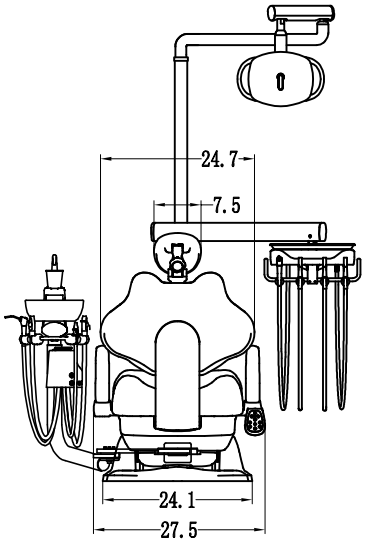
24.7
7.5
24.1
27.5

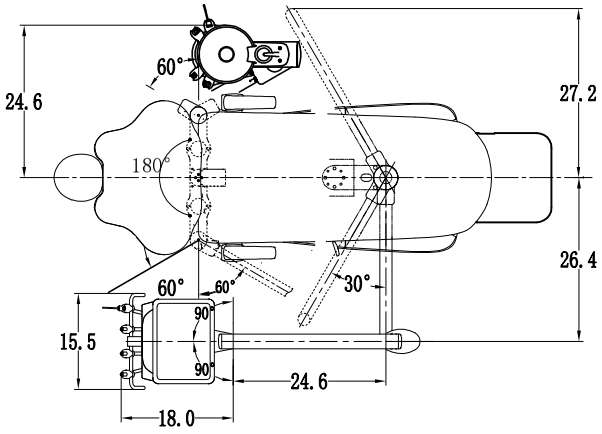
60°
24.6
27.2
180°
26.4
60°
60°
30°
90°
90°
15.5
24.6
18.0

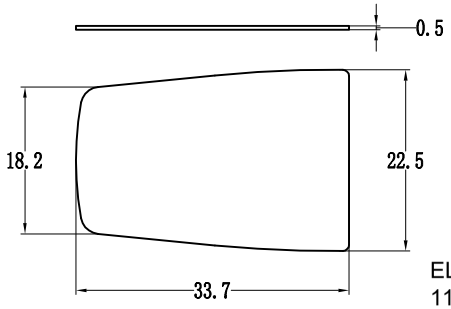
0.5
18.2
22.5
33.7

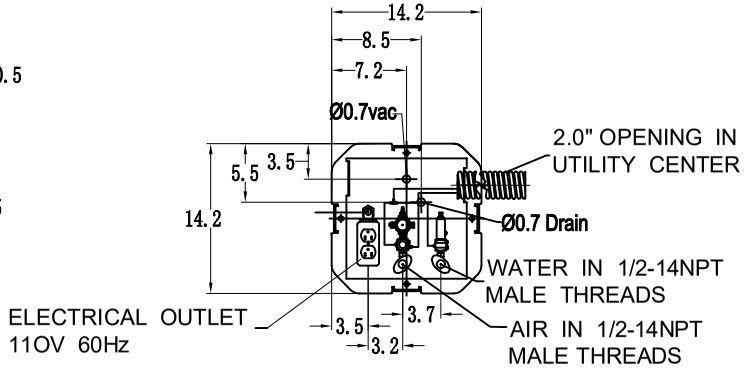
14.2
8.5
7.2
Ø0.7vac
2.0" OPENING IN
UTILITY CENTER
3.5
5.5
14.2
Ø0.7 Drain
WATER IN 1/2-14NPT
MALE THREADS
ELECTRICAL OUTLET
110V 60Hz
3.5
3.7
3.2
AIR IN 1/2-14NPT
MALE THREADS