UNIT: inches

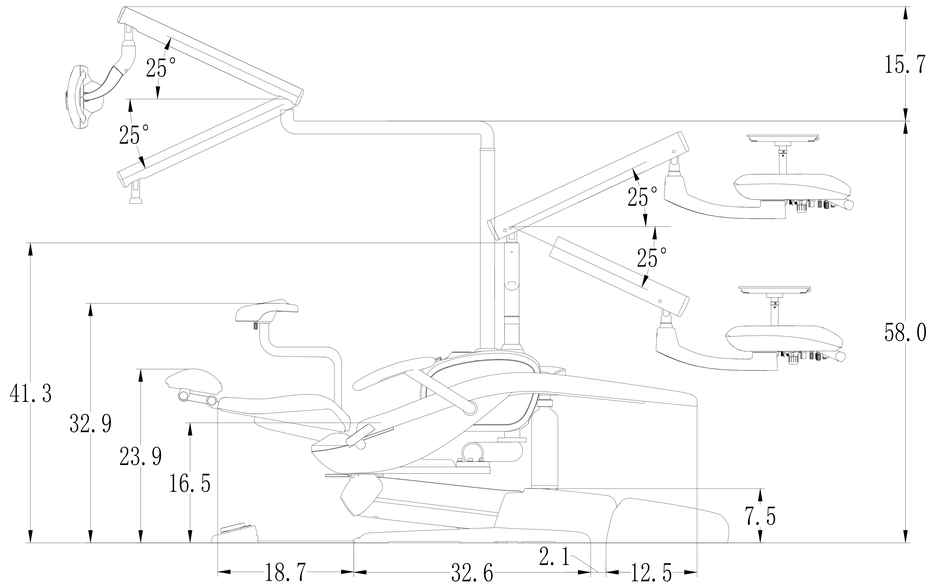
25°
25°
25°
25°
15.7
58.0
41.3
32.9
23.9
16.5
7.5
2.1
18.7
32.6
12.5

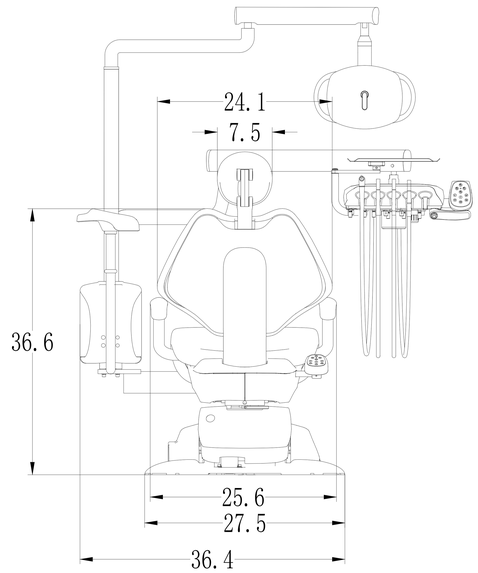
24.1
7.5
36.6
25.6
27.5
36.4

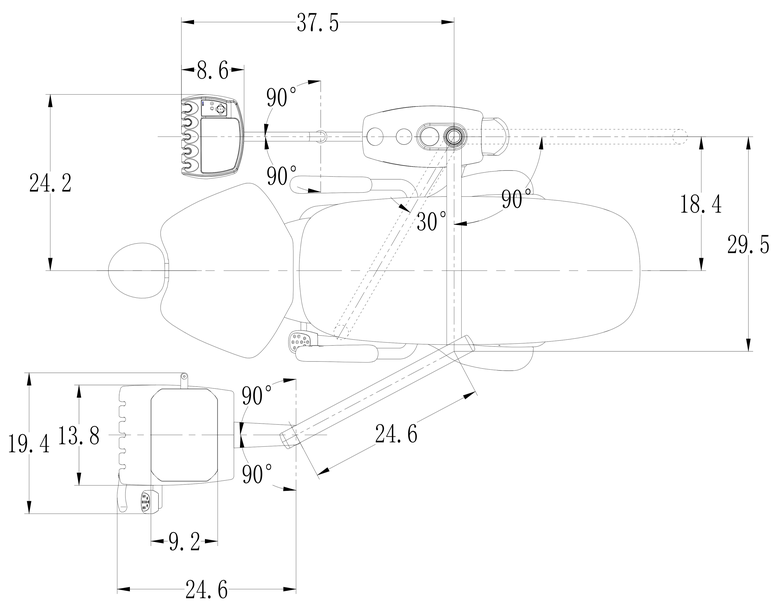
37.5
8.6
90°
90°
90°
30°
90°
24.2
18.4
29.5
90°
90°
19.4
13.8
24.6
9.2
24.6

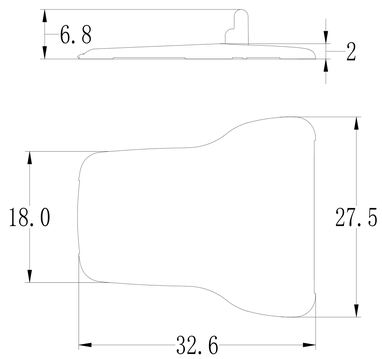
6.8
2
18.0
27.5
32.6

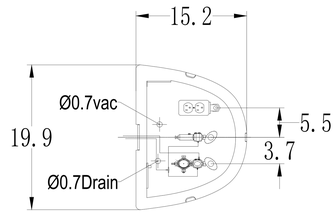
15.2
Ø0.7vac
19.9
5.5
3.7
Ø0.7Drain