http://www.adsequip.com/

Installation Manual of Classic 201 Delivery System

P/N:8500992 Version：D Date：2023-08-07

Copyrights

ADS makes no warranty of any kind with regard to this material , including but not limited to, the implied warranties of merchantability and fitness for a particular purpose. ADS shall not be held liable for any errors contained herein or any consequential or other damages concerning furnishing, performance or use of this material. The information in this document is subject to change without notice . If you find any problems in the documentation, please report them to us in writing. ADS does not warrant that this document is error-free.
No part of this document may be copied, reproduced, altered, or transmitted in any form or by any means, electronic or mechanical, including photocopying, recording, or by any information storage and retrieval system, without prior written permission from ADS.
The document is intended to be used in conjunction with the equipment.

Comments and feedback

Please contact us if you have any feedback and opinions on this document:
Add: 1590 S Milliken Ave., unit A, Ontario, CA 91761
Tel: (626) 620 0456
E-mail : sales@adsequip.com
http://www.adsequip.com/

Product service

If you want to get service information, please contact the local dealer authorized by ADS company.
Technical support tel: 800 488 9708

CONTENTS

1 Introduction.....1
1.1 Products information.....1
1.2 Symbols explanation.....1
2 Compositions.....3
3 Dimensions.....4
4 Specifications.....5
5 Preparations.....5
5.1 Attentions.....5
5.2 Tools recommended.....6
5.3 Installation sequence.....7
6 Installation.....8
6.1 Install the swing mount cuspidor package.....8
6.2 Installation of delivery system.....12
6. 2. 1 Install the rotary arm.....12
6. 2. 2 Install dentist unit.....13
6. 2. 3 Adjust the level arm.....16
6. 3 Install dental light（optional）.....17
6. 4 Post-Installation Wire Harness Protection.....21
6. 5 Install foot control.....22
6. 6 Junction box connection.....23

1 Introduction

1.1 Products information

- **Name**：Delivery system
- **Model**：**Classic201**
- **Working conditions**：

① Ambient temperature：5 ℃～40 ℃；

② Relative humidity：≤ 80%；

③Nominal Voltage：AC110 V±22 V；

④Nominal Frequency：60 Hz±1 Hz；

⑤ Water pressure：29psi～58psi；

⑥ Input air pressure ： 72.5psi~101.5psi， Air flow ≥50 L/min.

Unit conversion	
MPa	psi
0.2MPa	29psi
0.4MPa	58psi
0.6MPa	87psi
0.8MPa	116psi

1.2 Symbols explanation

Table 1

Symbols	Explanations
 Manufacturer	 EU Representative
 Manufacturing Date	 Serial Number
 Handle with Care	 Keep Dry

Symbols	Explanations
 Refer to Instructions	 Caution!
 Refer to Attached Document.	 Backrest down
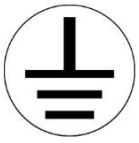 Avoid Electric Shock	 Backrest up
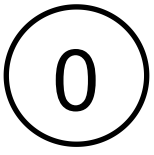 Ground Protection	 Chair down
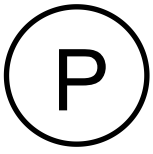 Setup Button	 Chair up
 Spitting position	 Program chair position 1
 Program chair position 2	 Program chair position 3

2 Compositions

The system is composed by following components.

Figure 1 Delivery system

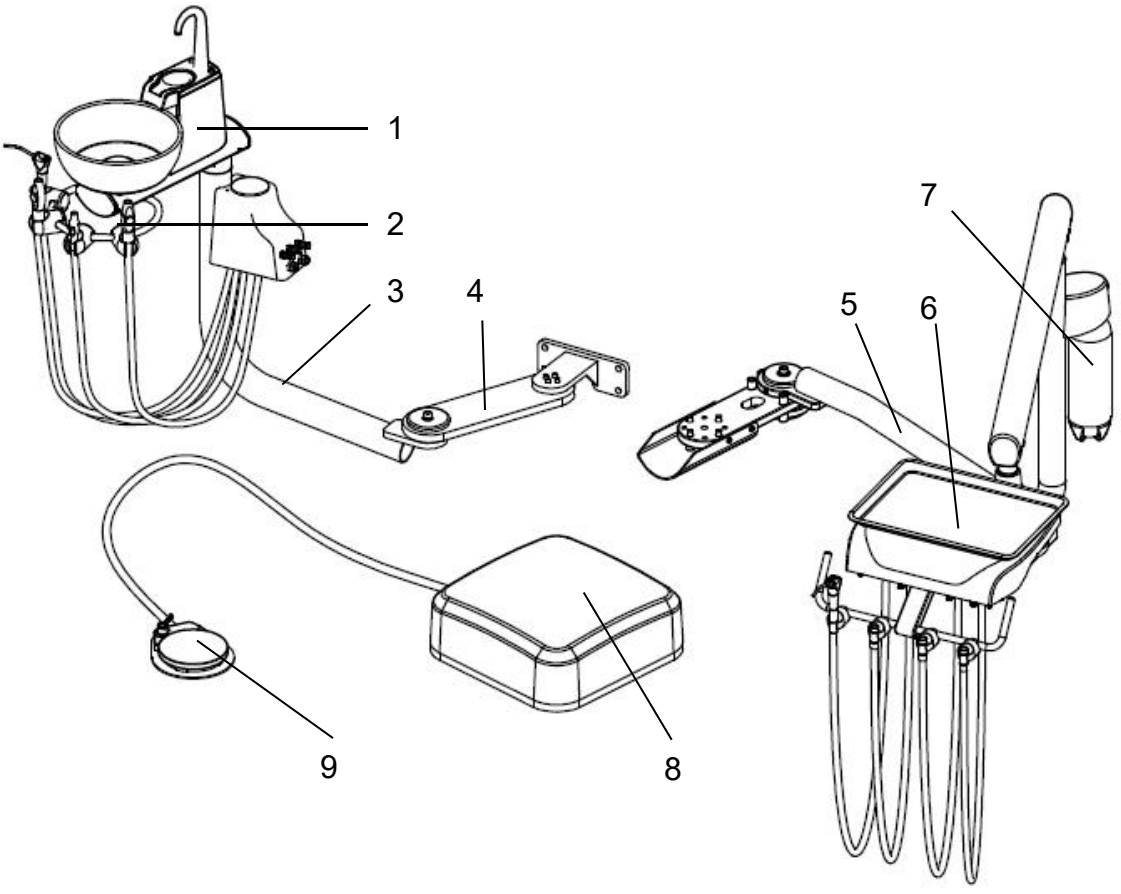

Item	Component	Item	Component
1	Cuspidor	6	Dentist's control
2	Assistant hanger	7	Water bottle
3	Swing arm	8	Junction box
4	Swing adapter	9	Foot pedal
5	Compass arm	10	

3 Dimensions

Size: inch

Figure 2

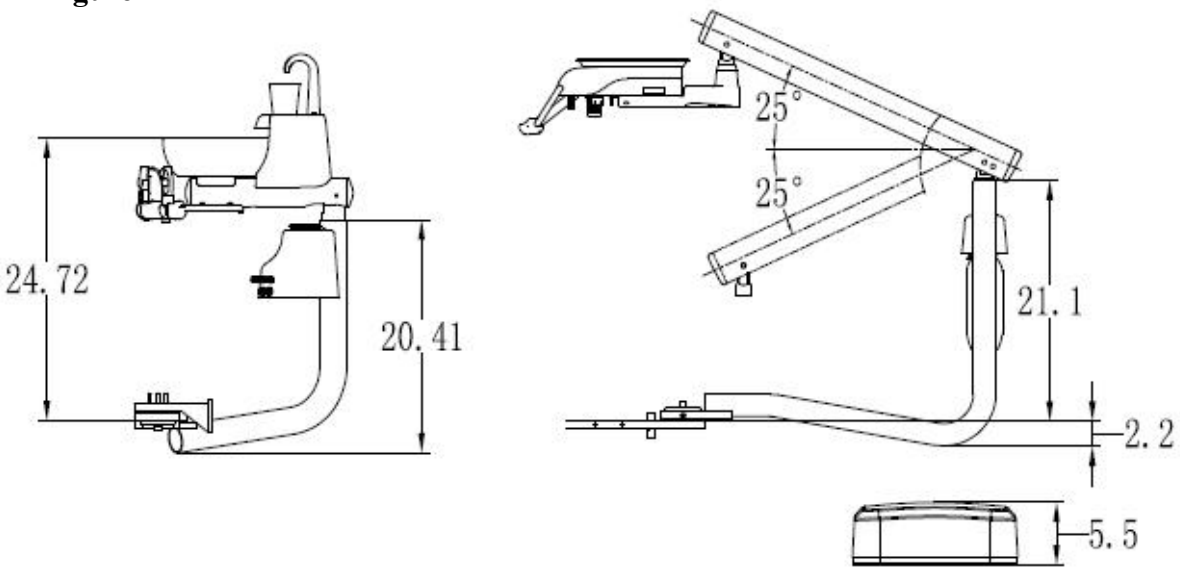

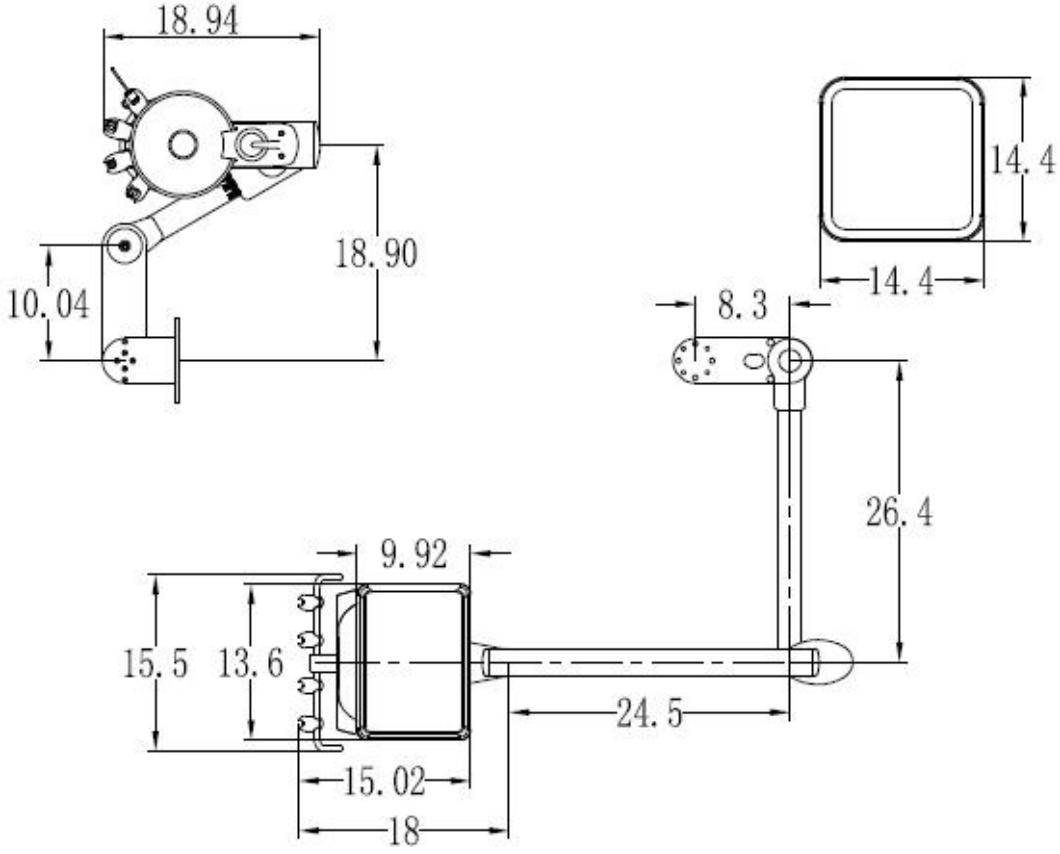

4 Specifications

Table 2

Light illuminance	8000-40000 Lux
Maximum load of Dentist Unit tray	2.5kg
Ambient temperature	5 ℃～40 ℃
Air supply pressure	72.5psi~101.5psi
Water supply pressure	29~58psi

5 Preparations

5.1 Attentions

Before install the unit, you should:

- Confirm the floor construction is safety to support the chair and clean.
- Apply two manually operated valves for the air and water source.
- Exhaust the dirty water and air before connecting.
- **Before install the unit, please read the manual carefully:**
- Input voltage AC 110V，60Hz。
- Make sure the dental unit is well-grounded.
- All the electrical components and connections should be made by an authorized technician.
- Only fuse and accessories recognized by ADS technician can be used.
- This device should not operate in the environment of high temperature, high humidity, vibration flammability, unbalance, or dusty.
- Only the authorized spare parts can be used in this device.
- This device can not be used in the environment of strong magnetic, electromagnetic.

5. 2 Tools recommended

The tools and instruments need to prepare before installation.

Figure 3

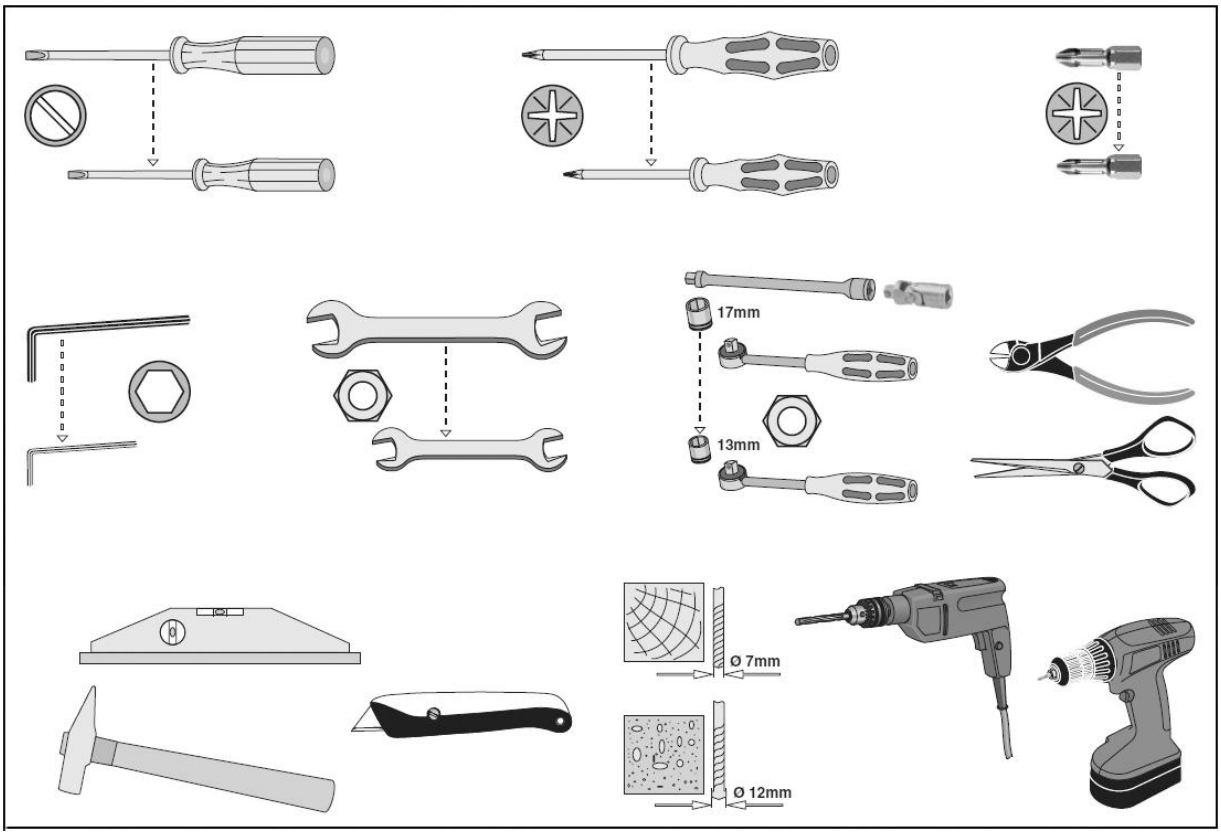

5. 3 Installation sequence

Installation modules of Classic201 system. Install the modules in following sequence.

Figure 4

1 Compass arm set



2 Classic dentist unit

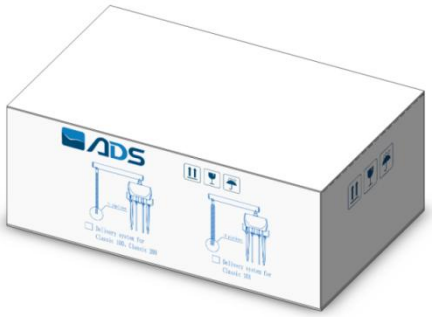

3 Dental light unit

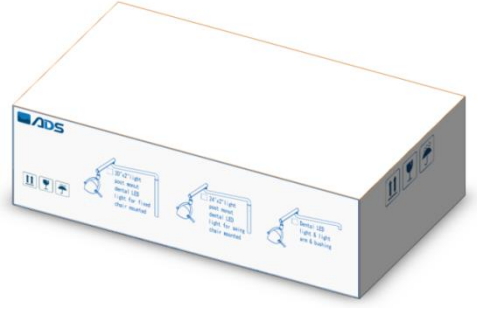

4 Junction box unit



Notice:
Each box contains all the parts that belong to the module .

6 Installation

It is necessary to check whether the system and its accessories are damaged after unpacking. In addition, please check all accessories according to the accessories list. Install the system in the following steps:

6.1 Install the swing mount cuspidor package

1. Install the swing arm to the swing dapter on the chair.

Figure 5

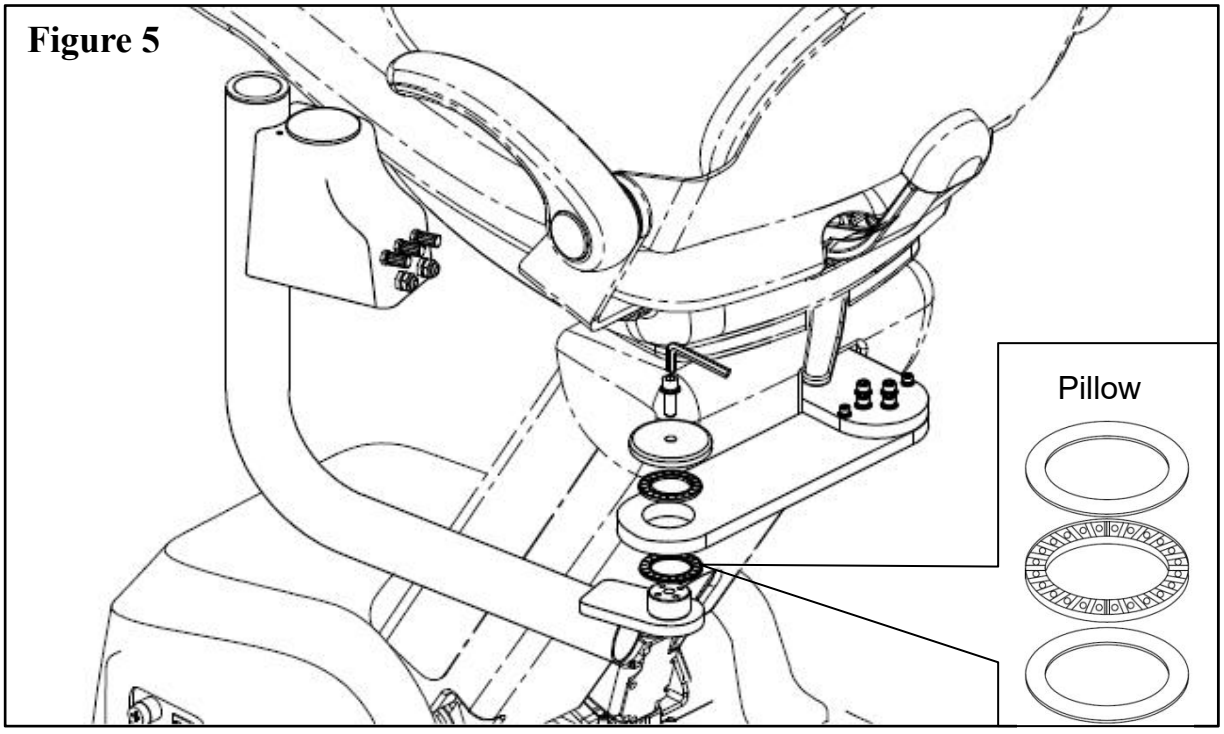

2. Pull the lines of cuspidor from the Rigid arm, insert cuspidor into the Rigid arm.

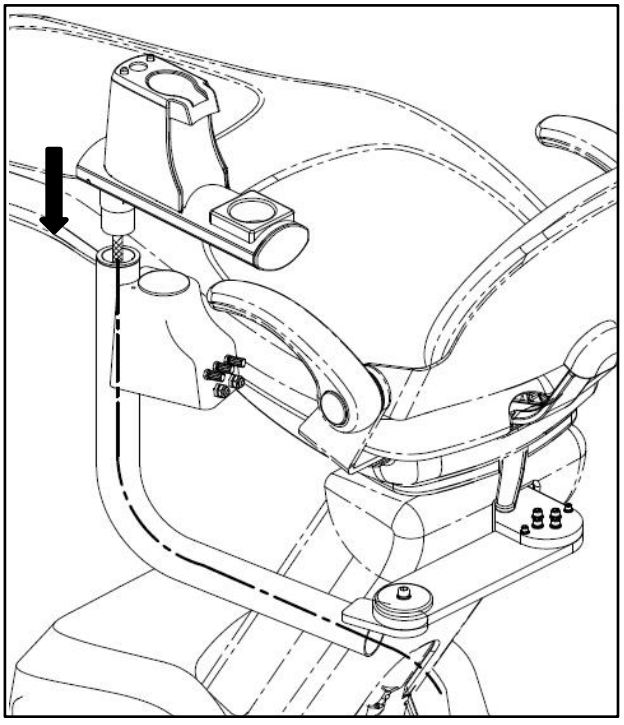

Figure 6

3. Put the cuspidor bowl into the cuspidor, and put filter 1 , cover 2, and install the filling pipe 3.

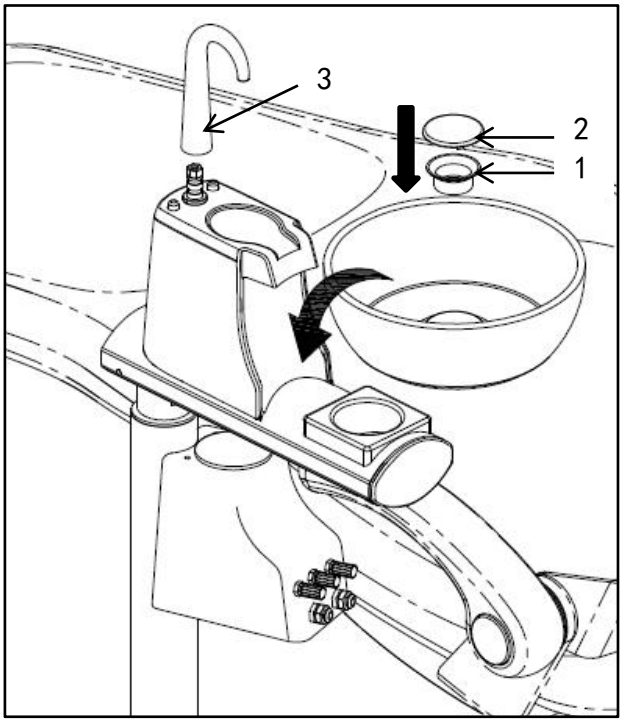

Figure 7

4. Install the assistant hanger under the cuspidor with two screws.

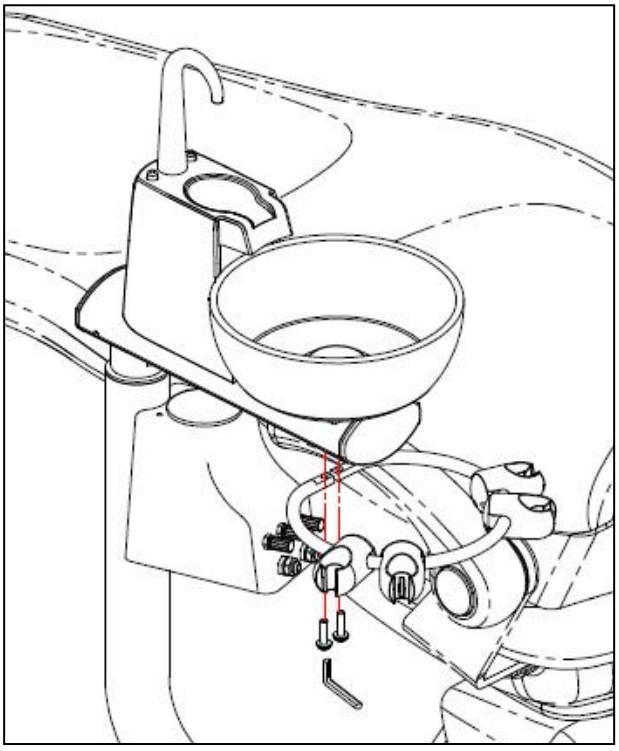

5. Put the HVE, SE handle and syringe handle to the assistant hanger.

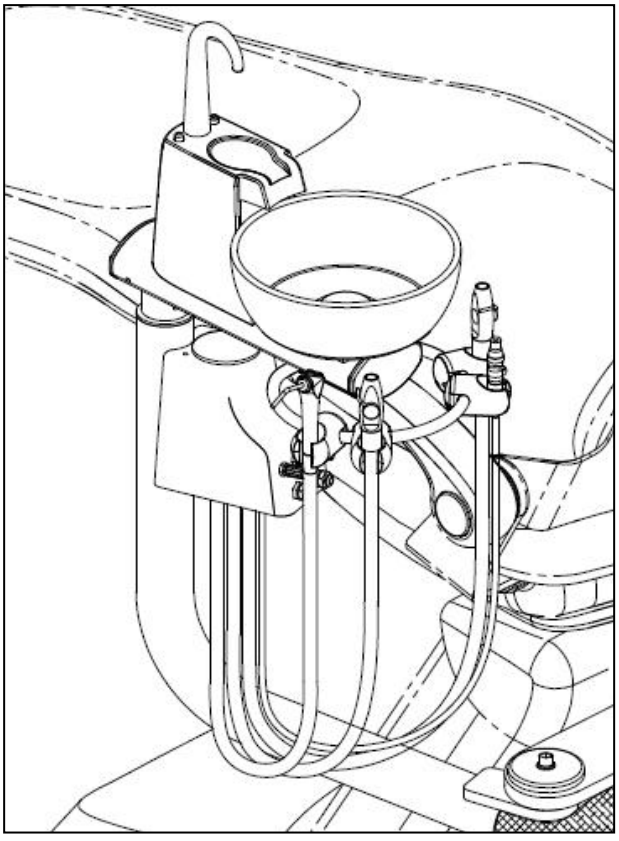

Figure 8

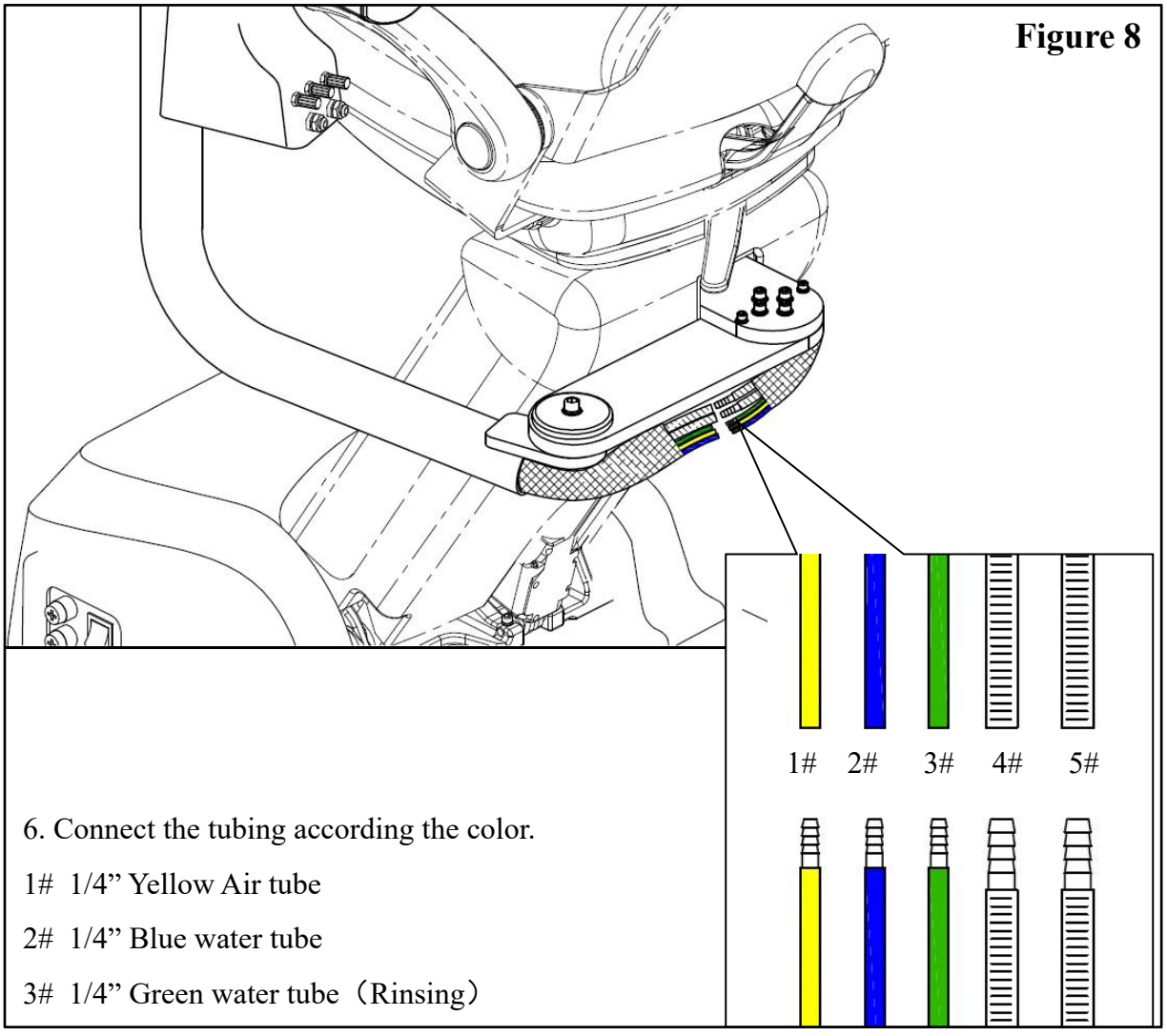

6. Connect the tubing according the color.

1# 1/4” Yellow Air tube

2# 1/4” Blue water tube

3# 1/4” Green water tube（Rinsing）

7. Pull the corrugated pipe to the fixed base from Rigid arm. Fix the corrugated pipe to the fixed base with buckle.

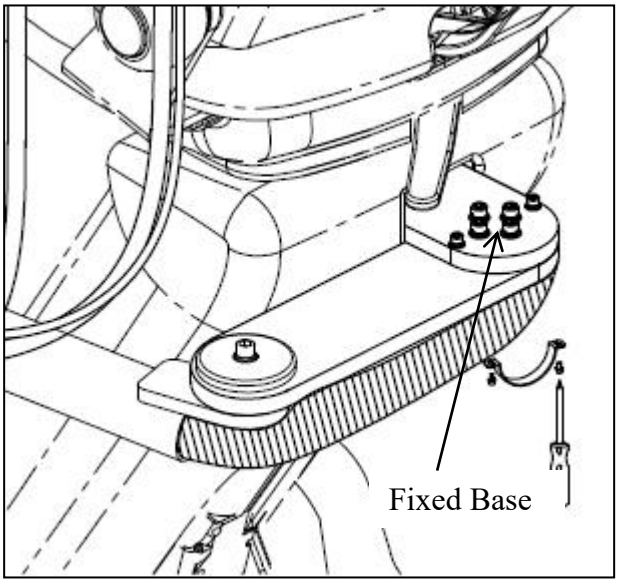

6. 2 Installation of delivery system

6. 2. 1 Install the rotary arm

1. Release the M10*30 screw of the connecting plate, mount the rotary arm to the front mounted connecting plate as the figure shown, then fasten the screw.

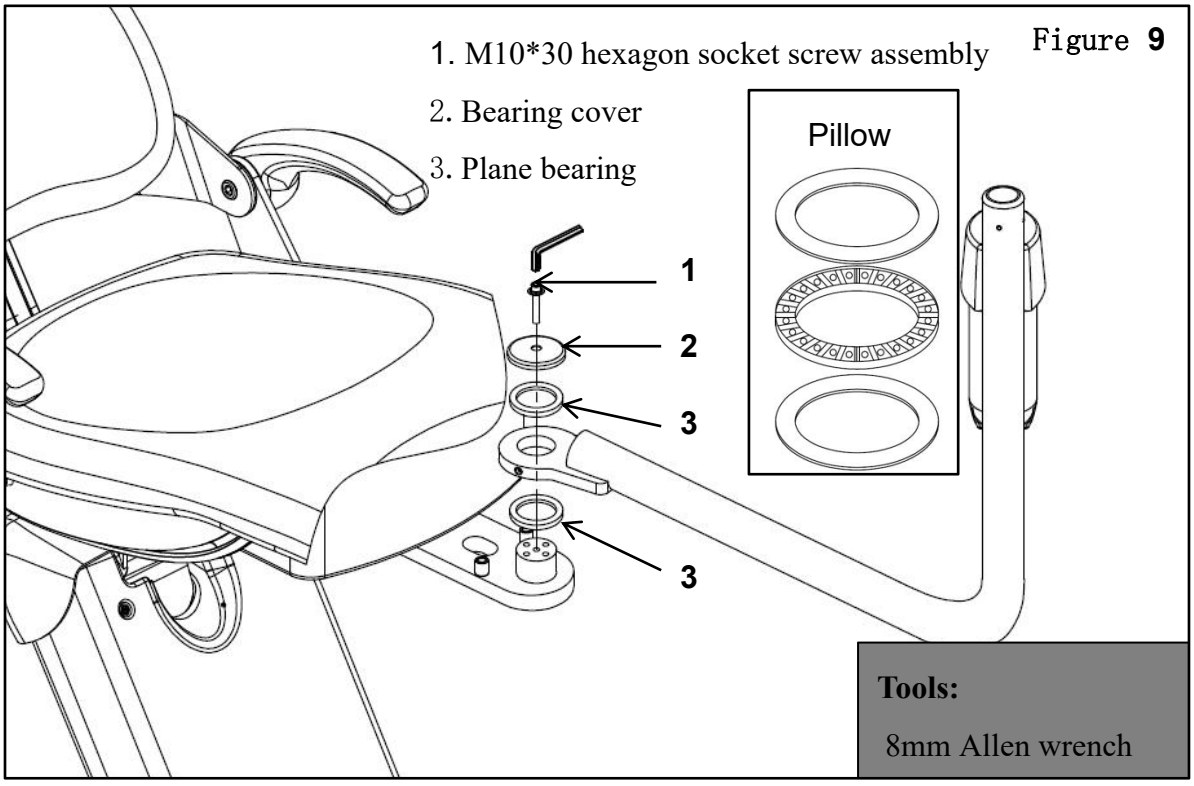

Figure 9

2. Assure the levelness of the rotary by regulating the four screws on the connecting plate.

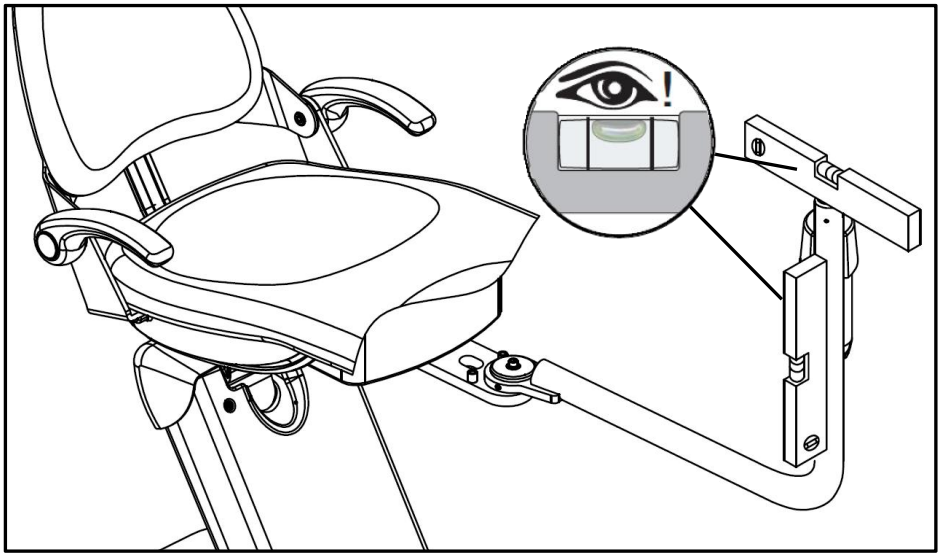

Figure 10

6. 2. 2 **Install dentist unit**

Compositions of dentist unit

Figure **11**

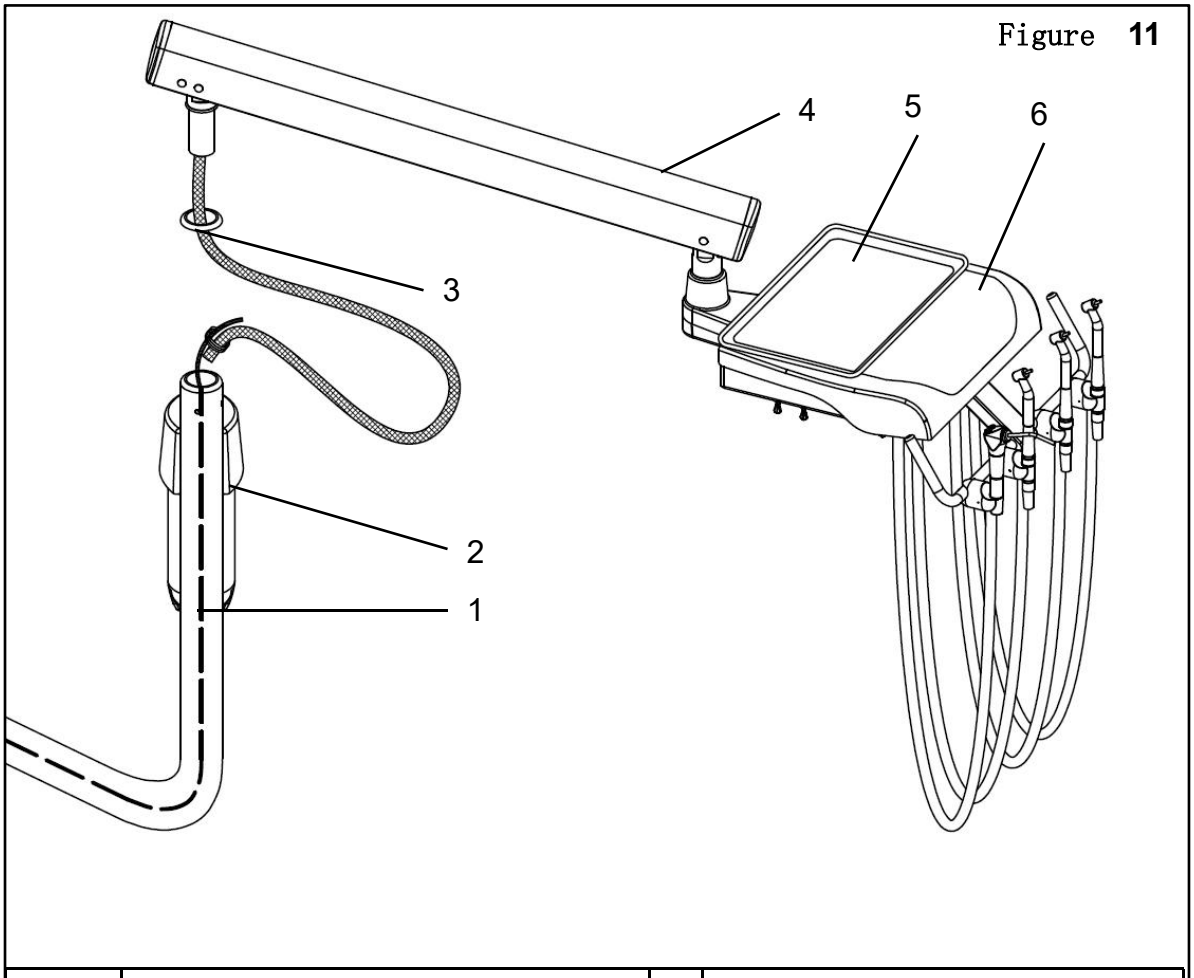

1	Rotary arm (frront mounted)	4	Level arm
2	Water bottle (front mounted)	5	Instrument tray
3	Cosmetic ring	6	DE-2 Delivery head

Figure **12**

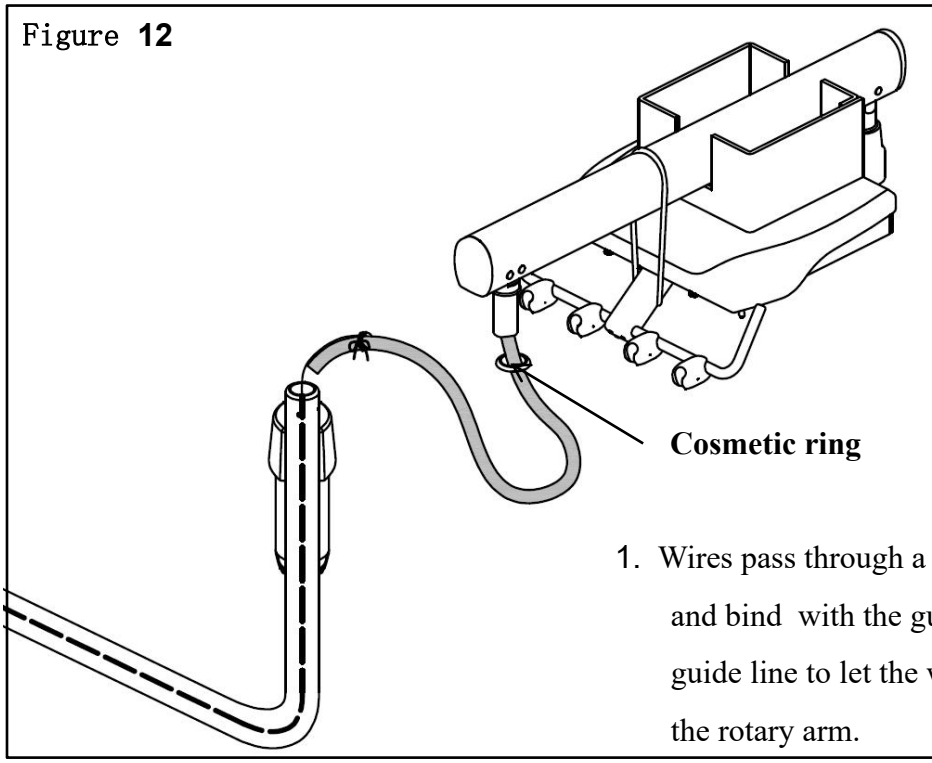

1. Wires pass through a cosmetic ring and bind with the guide line, pull the guide line to let the wires get through the rotary arm.

2. Install the unit to the rotary arm, fix it with three M6*8 screws and insert the screw caps. Remove the wrappages after finish this step .

Note： Tightness of the M6 screw influences damping force of the level arm.

Tools：
3mm Allen wrench

Figure **13**

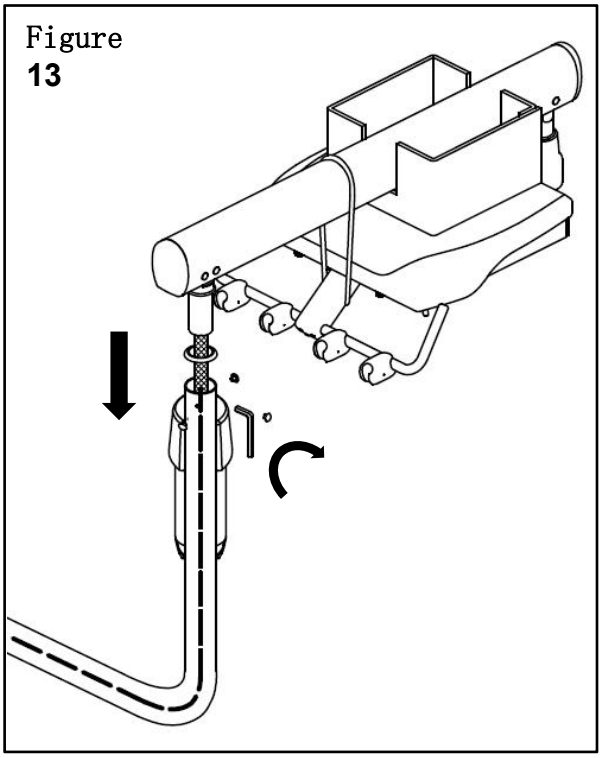

3. The tubes of the dentist unit and those reserved of the chair shall be connected by color, and close the cover after connection. Ignore the reserved wires,you have no need to connect them for there's no control panel on delivery head.

Figure **14**

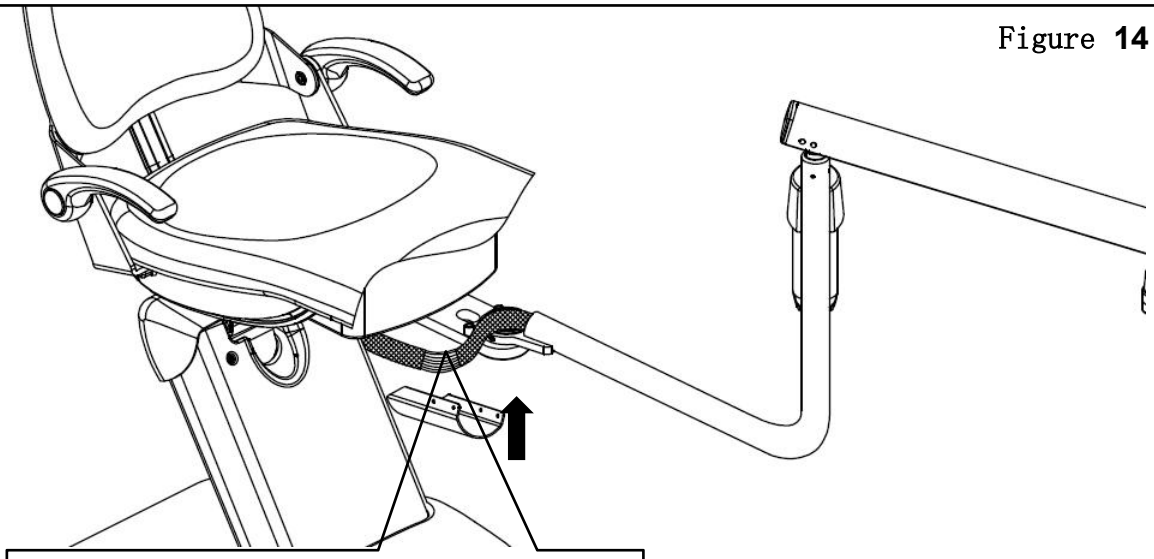

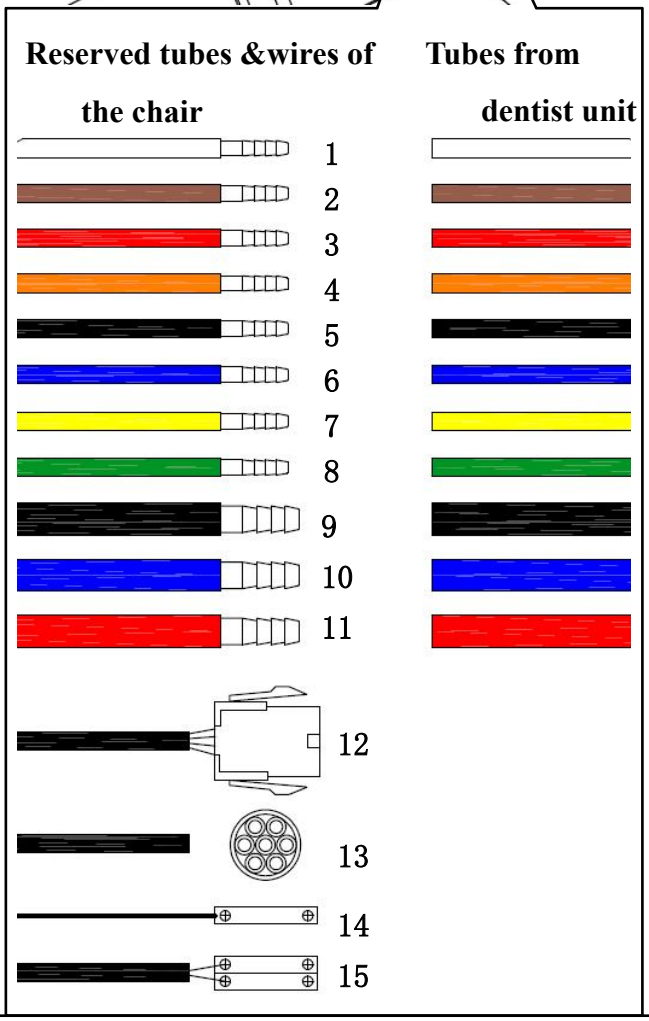

1. 1/8" white, reserved for dentist unit
2. 1/8" brown, reserved for dentist unit
3. 1/8" red, reserved for dentist unit
4. 1/8" orange, reserved for dentist unit
5. 1/8" black, reserved for dentist unit
6. 1/8" blue, reserved for dentist unit
7. 1/8" yellow, reserved for dentist unit
8. 1/8" green, reserved for dentist unit
9. 1/4" black, reserved for dentist unit
10. 1/4" blue，reserved for dentist unit
11. 1/4" red，reserved for dentist unit
12. Control wire for delivery head
13. Reserved Seven core wire
14. Ground wire for delivery head
15. 24V power cord for dental light

6. 2. 3 **Adjust the level arm**

1. Remove the screw caps, change the tightness of the screws to adjust the damping force of level arm.

Note： Loosen the screws in counterclockwise, tighten in clockwise.

Tools：
3mm Allen wrench

Figure **15**

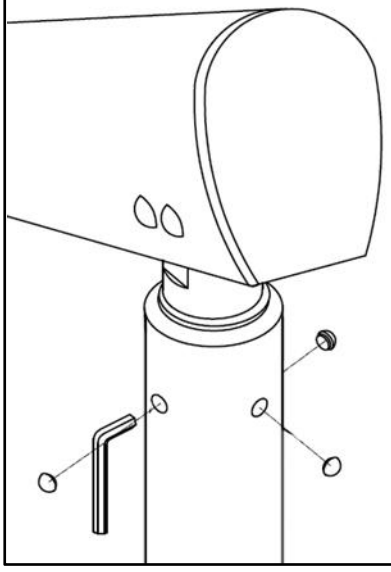

2. Remove the end cover of level arm, adjust the tightness of the screw to get suitable balance force.

Note： Loosen the screws in counterclockwise, tighten in clockwise.

Tools：
5mm Allen wrench

Figure **16**

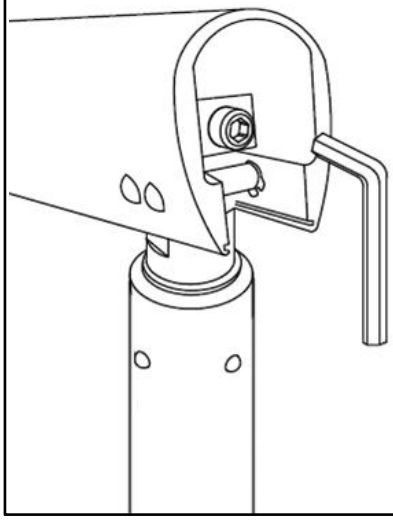

6.3 **Install dental light（optional）**

Notice： Please ignore this step if there is no lamp configuration.

Figure 17

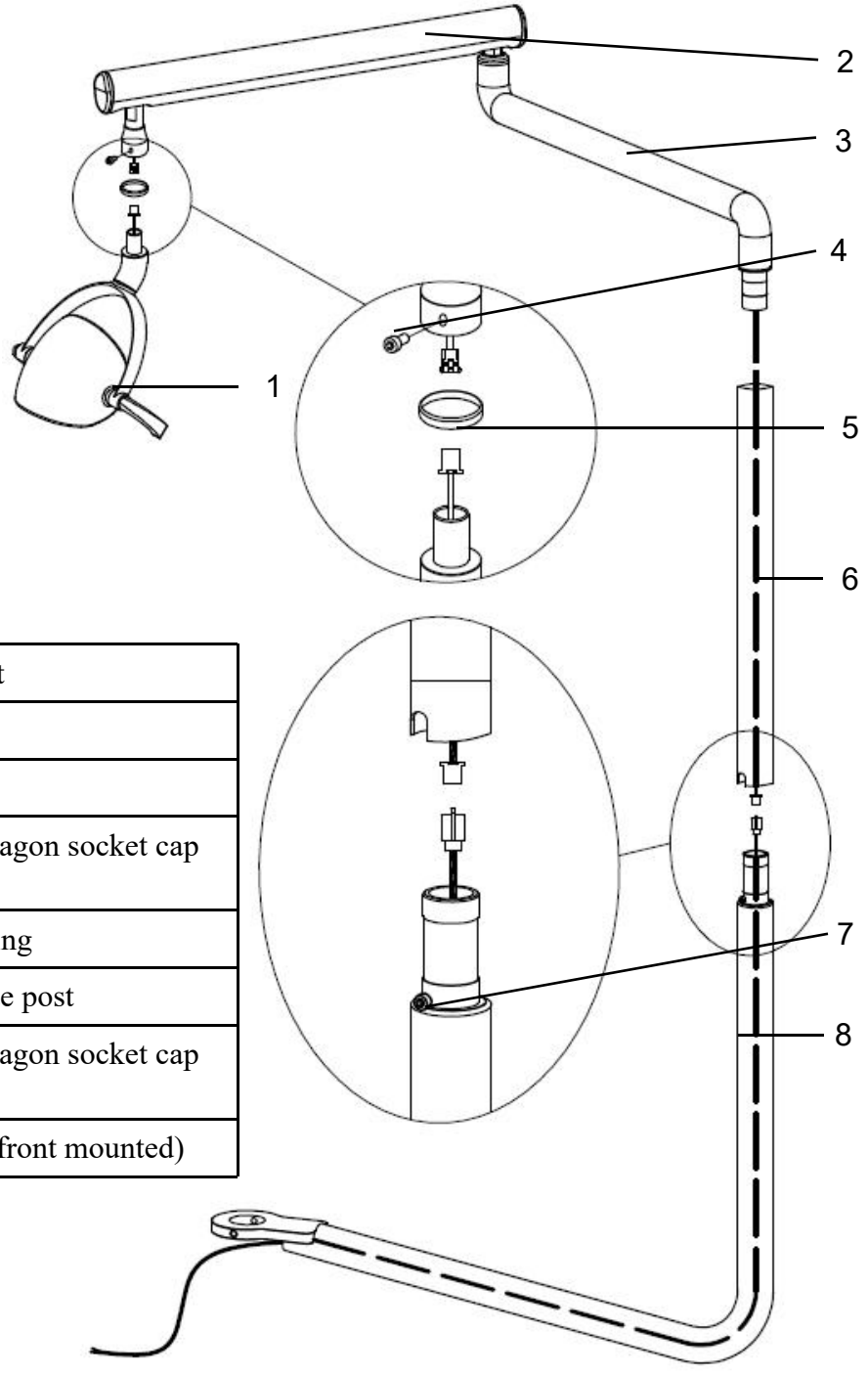

1	Dental light
2	Level arm
3	Rotary arm
4	M5*12 hexagon socket cap screw
5	Cosmetic ring
6	Intermediate post
7	M5*10 hexagon socket cap screw
8	Lamp arm(front mounted)

1. Release the M10*30 screw of the connecting plate, mount the lamp arm to the front mounted connecting plate as the figure shown, then fasten the screw.

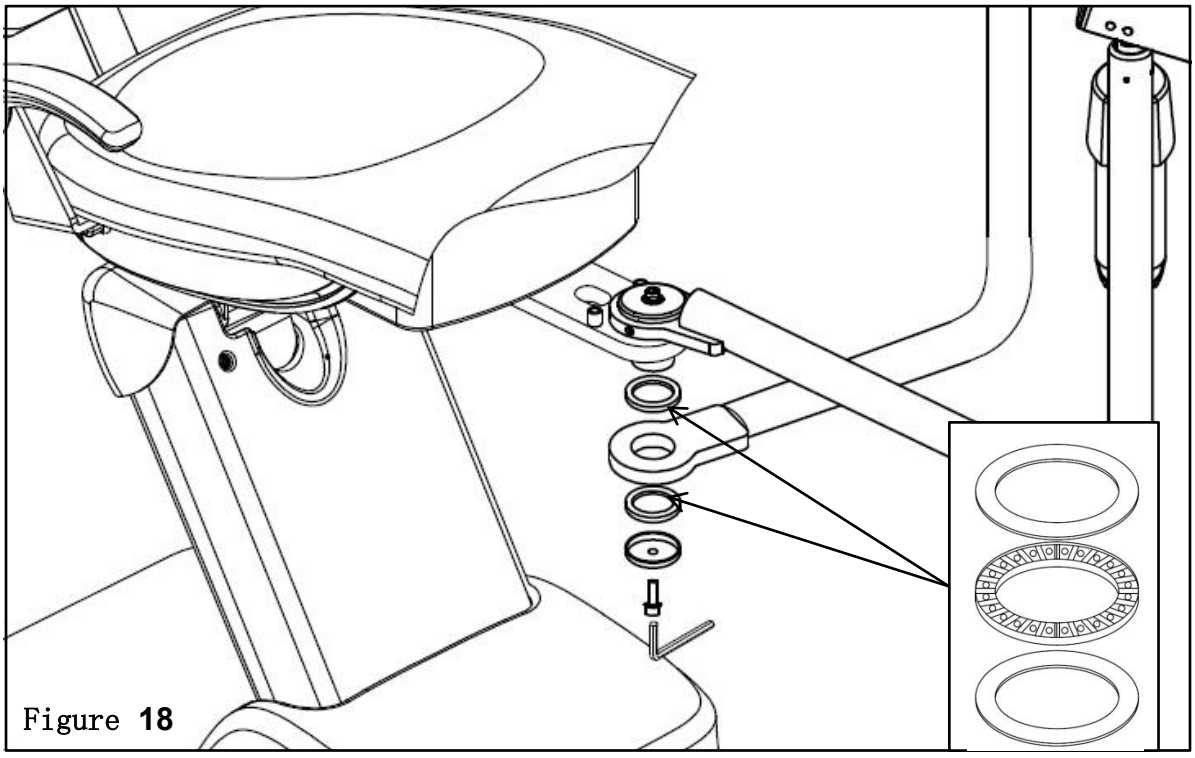

Figure **18**

2. Let the guide line route though the intermediate post as the figure shown, the post end which has a jag should be upward.

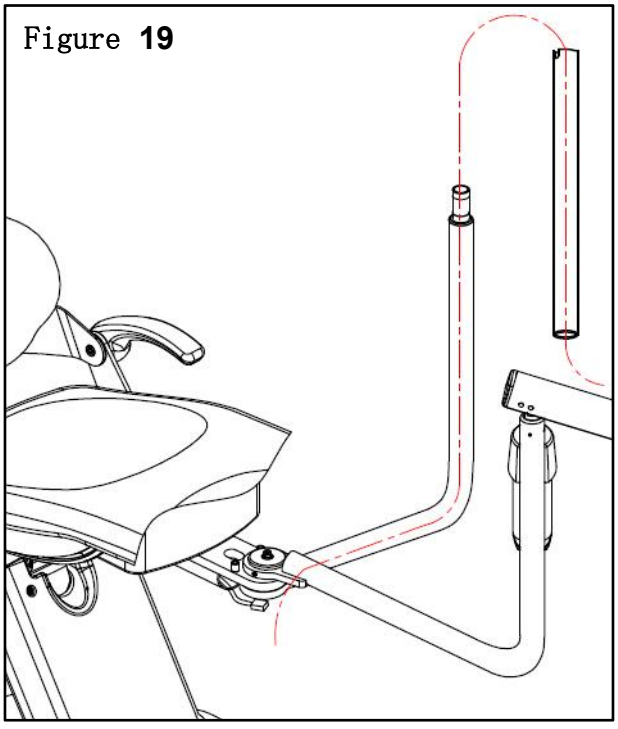

Figure **19**

3. Joint the intermediate post and the rotary arm, the jag on the post is screw position.

Figure **20**

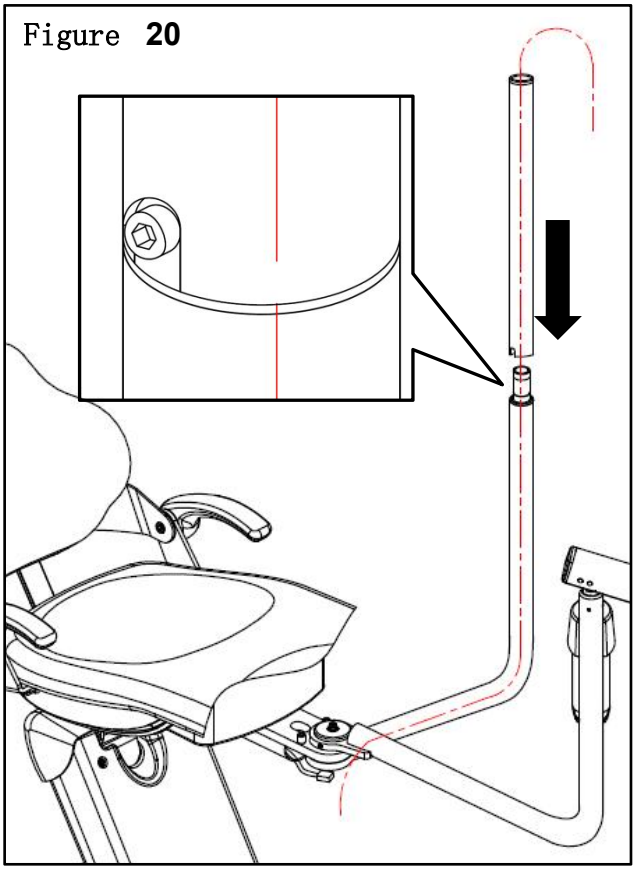

4. Joint the level arm and the rotary arm, take them out from the carton.

Figure **21**

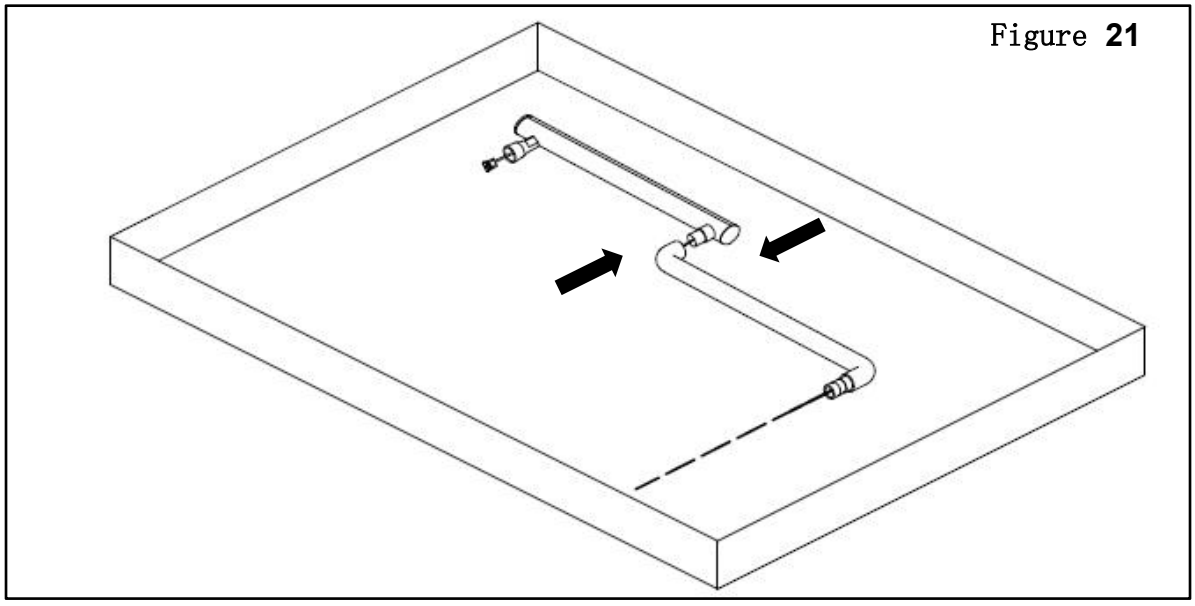

5. Tie the light wire and the guide line together, pull the guide line to lead the wire pass through the post and the lamp arm.

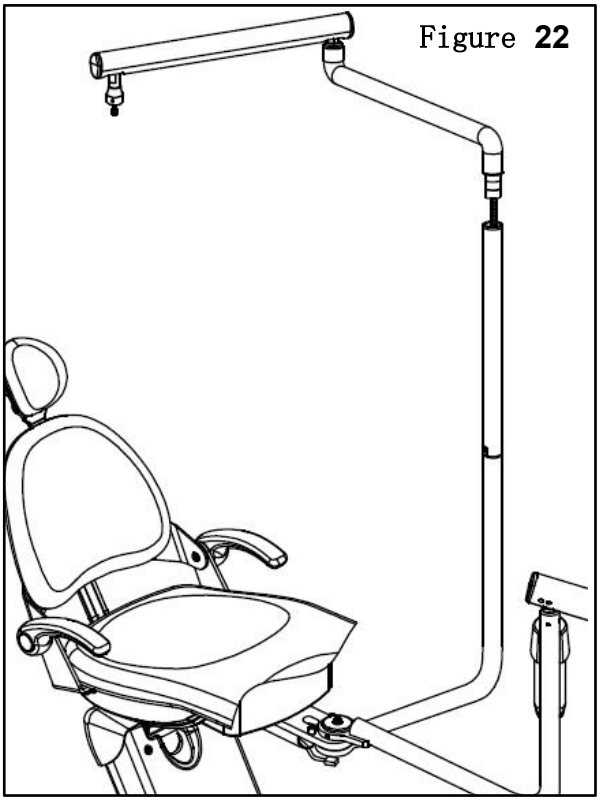
Figure **22**

6. Connect the light wires and the reserved wires brown to brown, yellow to blue.

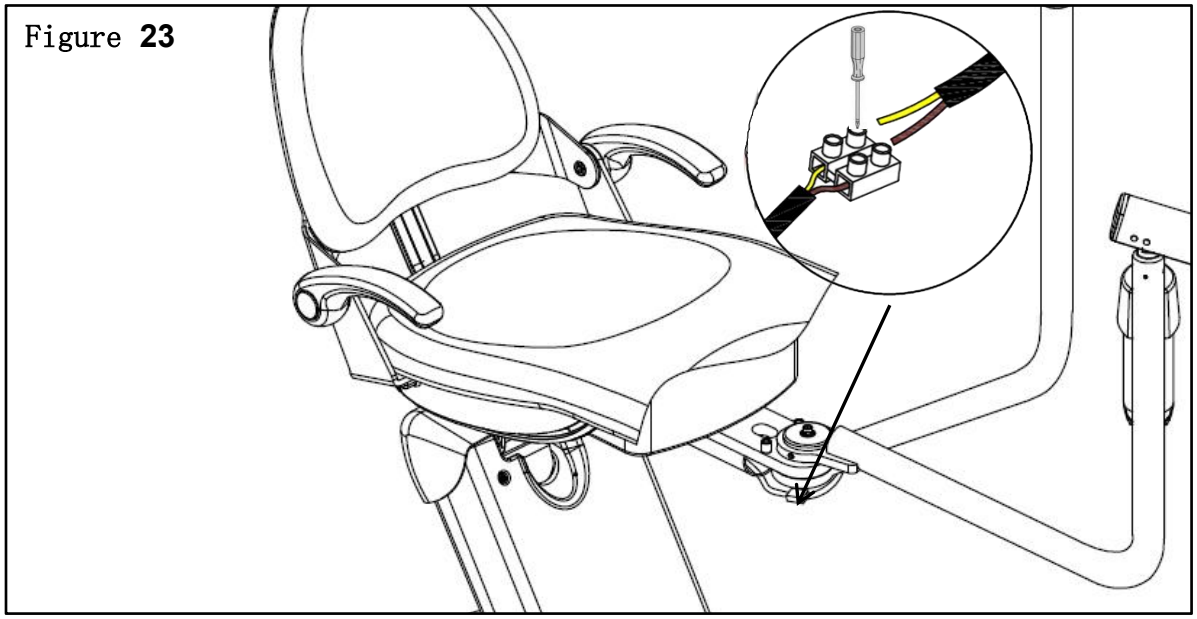
Figure **23**

7. Take out the lamp from the package, pass the wire through the cosmetic ring and connect the wire terminals, then joint the light head and the level arm together, fully fasten with a M5*12 screw.

Note: Hold the lamp , do not drop it to avoid damage.

Tools:
4mm Allen wrench

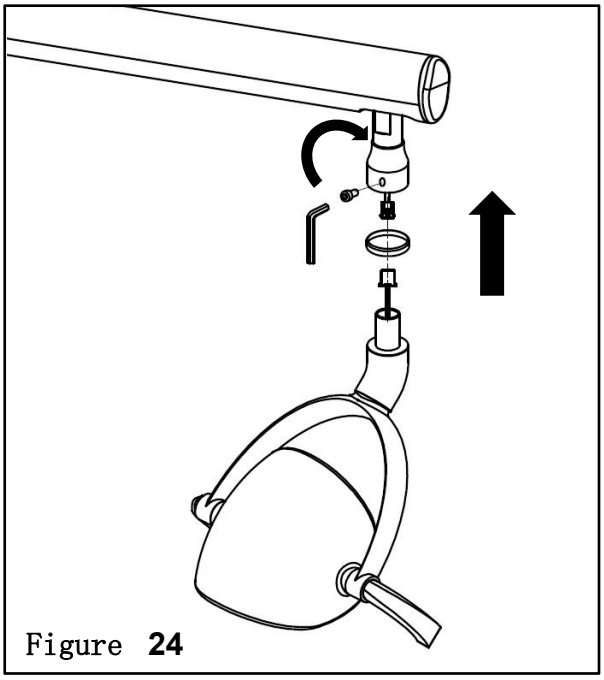

Figure **24**

6.4 Post-Installation Wire Harness Protection

1. Upon completion of dental chair installation procedures, enclose any exposed sections of the internal wire harness bundle within a flexible winding conduit.

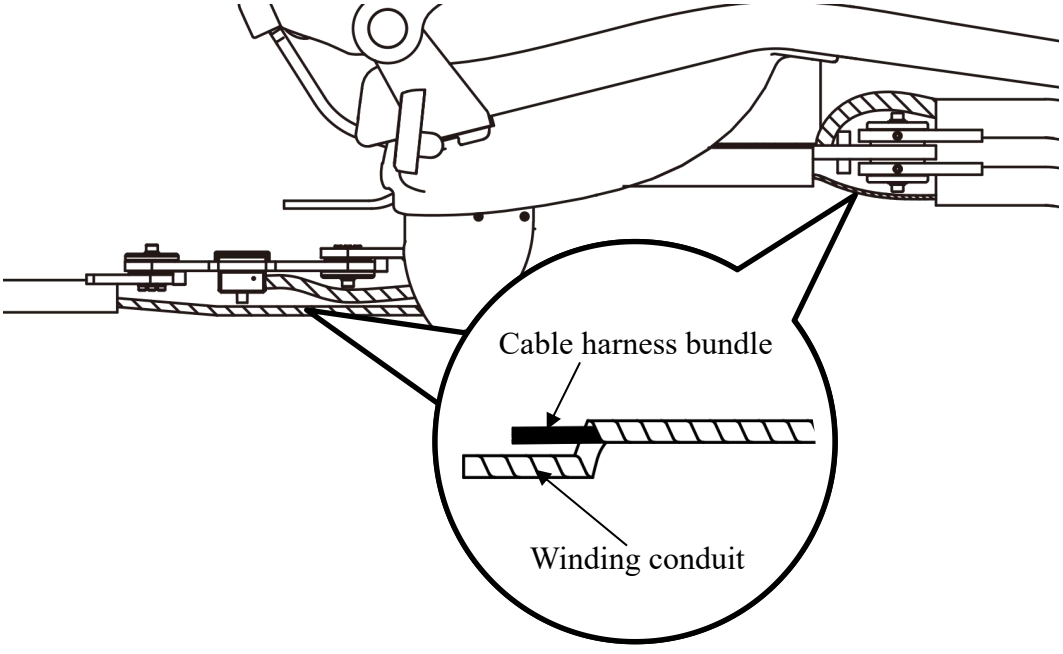

6. 5 Install foot control

1. Pass the foot tube over the side of hydraulic pump, fix the tube by clips.

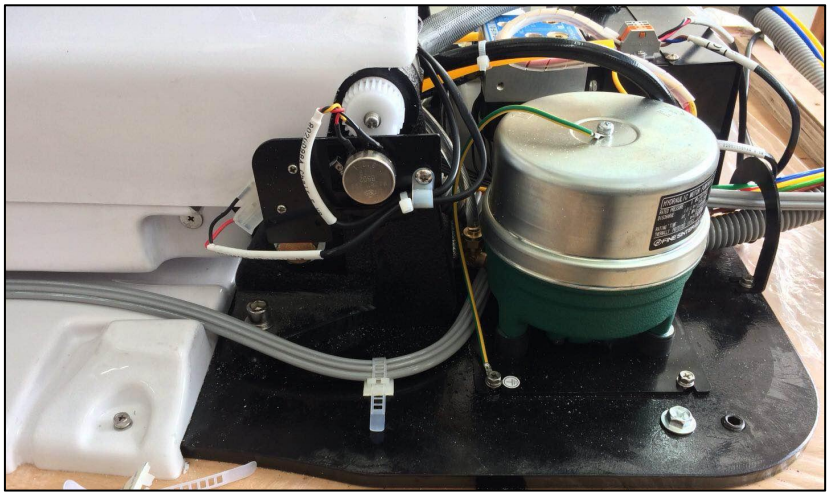

Figure **25**

2. Bind the front part of the foot tube and the tube bundle together with zip ties.

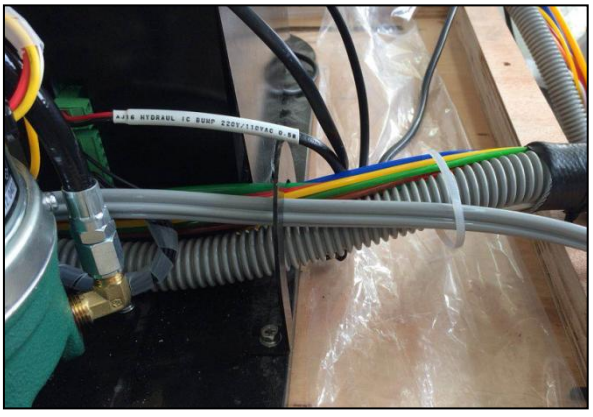

Figure **26**

3. The other end of the foot tube shall reach out from the side of front shell .



Figure **27**

6. 6 **Junction box connection**

Figure 28

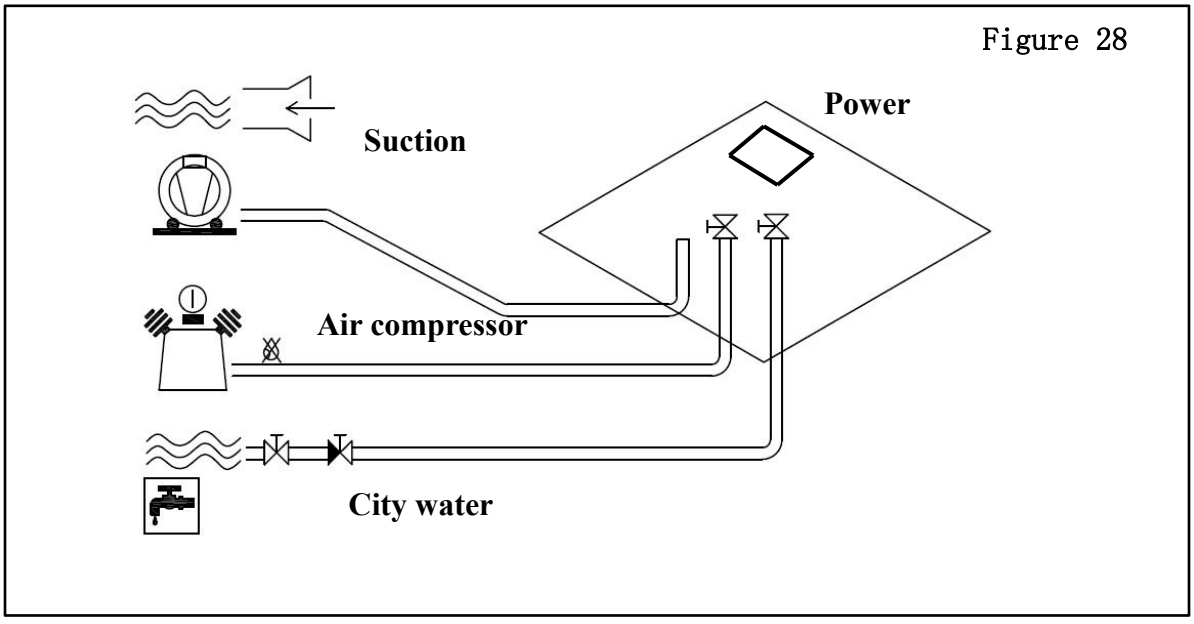

Figure 29

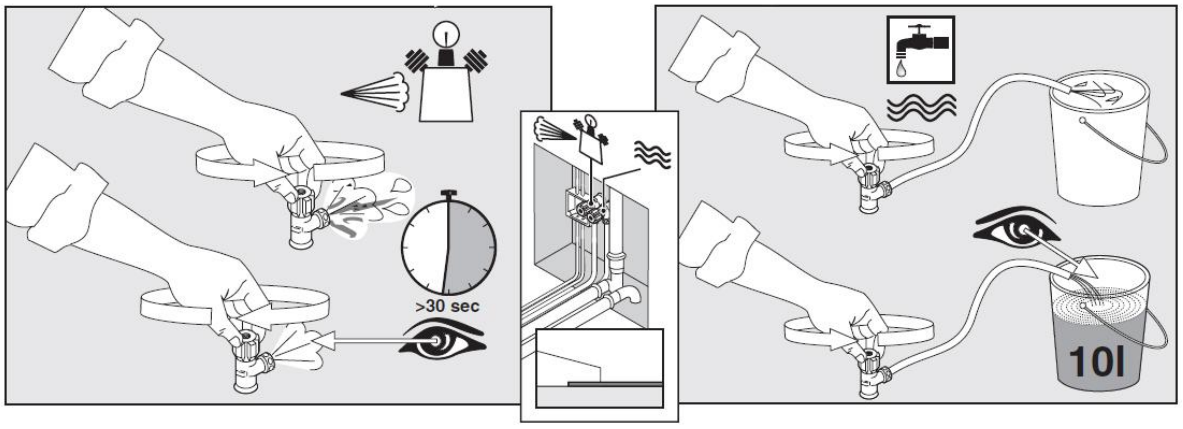

The tubes & wires are in the tubing zone or inside the external junction box, their places depend on your chair configurations.

1. Open the valves to exhaust water and air, clean the tubes before connecting.
2.. Open the cover of the junction box，connect the air-in，water-in and water-out .
3. Take out the power box of dental light ,connect the power cord to the power box, and plug into the socket.
4. Close the cover after making sure they are well-performed.

Connect the pipe of the junction box and the chair according to the color, connect the pipe of the foot control with the reserved pipe on the chair and the pipe of the junction box valve according to the color.

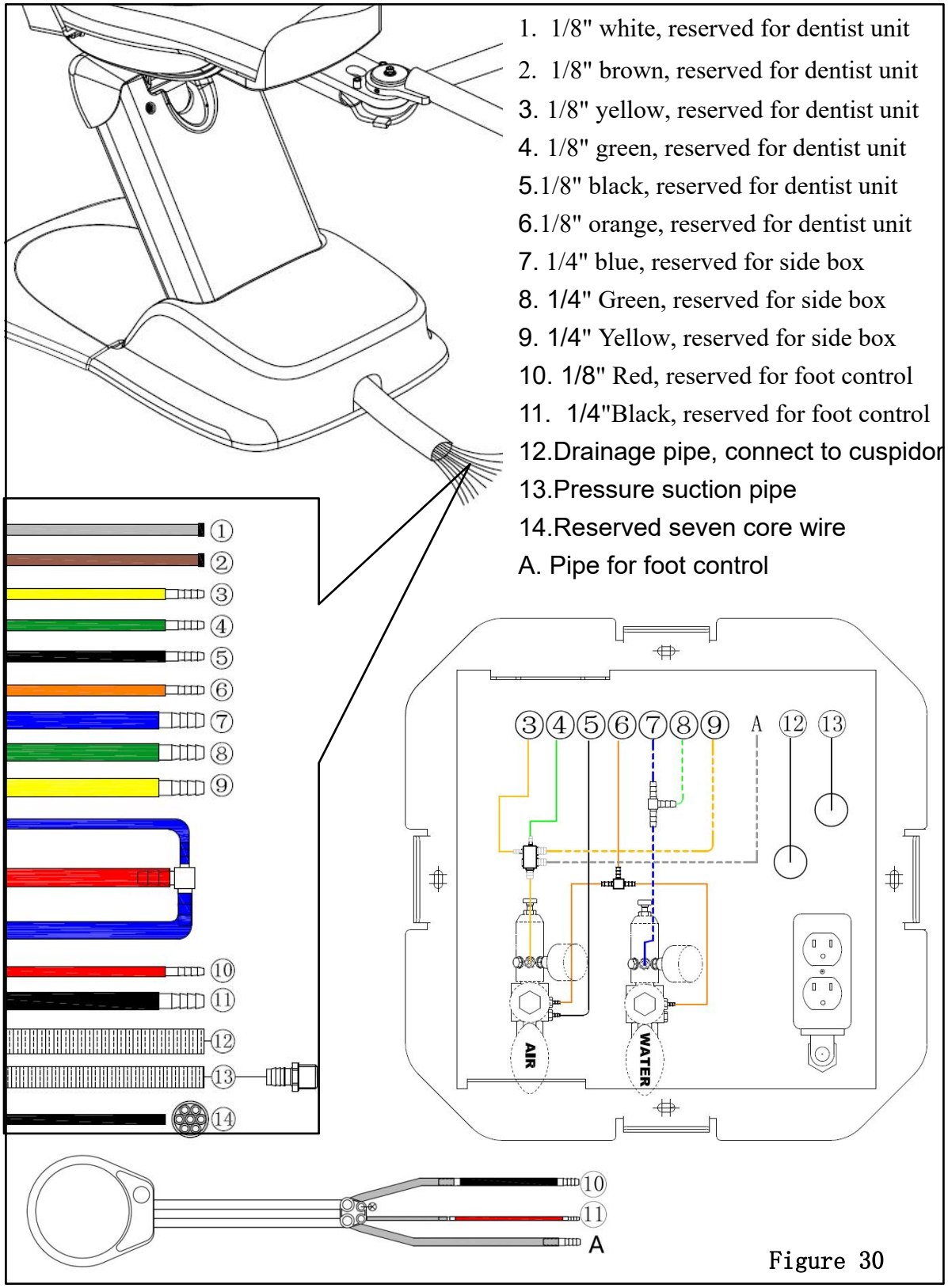

Figure 30

We reserve the right to make any alterations which may be due to technical improvements.





ADS Dental System Inc.

Add: 1590 S Milliken Ave., unit A, Ontario, CA 91761
Tel: (626) 620 0456
E-mail: ads@adsequip.com
http://www.adsequip.com/