BDS

2026
Product Catalog

AMERICAN MADE,
DURABILITY BY DESIGN





Post NOT included,
if needed, length must be specified

Top Post Mount units include 28" Post



S-3630

3 HP Automatic 2" dia. Post Mount
Doctor's System with Pneumatic Brake Flex Arm and Swivel Tray
$5,000.00

S-3636

3 HP Automatic 2" dia. Top Post Mount
Doctor's System with Pneumatic Brake Flex Arm and Swivel Tray
$5,000.00

Dimensions

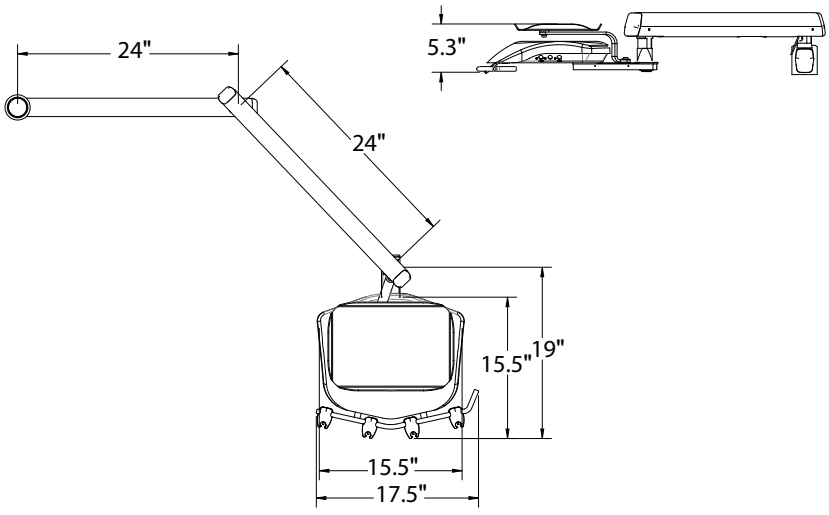

These products contain chemicals known to the State of California to cause cancer and/or reproductive harm. For more information go to www.P65Warning.ca.gov

Features of over the patient systems

	S-3630	S-3636
3 Handpiece automatic control	■	■
3 Way air/water syringe	■	■
Master ON/OFF toggle	■	■
Pressure adjustment for each handpiece	■	■
Easy to read pressure gauge (protected under cover	■	■
Air coolant adjustment	■	■
Non-retracting water coolant, adjustment, and purge	■	■
Asepsis handpiece tubing, sterling	■	■
Asepsis flex arm system with pneumatic brake	■	■
Unit mount swivel tray 9-3/4" x 12-1/2"	■	■
Unit mount post 28"		■
Standard disc foot control	■	■
Utility center with master valves & regulators	■	■
7' umbilical tubing	■	■

Options

	Part Number	Price		
Delete utility center	144-018	$590.00 Deduct	■	■
Delete handpiece station with tubing		$60.00 Deduct	■	■
Additional handpiece station with tubing (dry only)		$230.00 Add	■	■
Additional umbilical tubing (per foot)	115-500S	$15.00 Add	■	■
Unit mount post, 40" with bushing	146-203	$240.00 Add	■	
Left handed holder bar	107-019	N/C	■	■

Unit Mounted Touch Pad Control
(For Epic Chair)
107-145
$400.00



Water Bottle Kits, page 109
110-004 $230.00
110-028 $300.00



Handpiece Illumination System
5 Hole LED, 6 Pin
pages 115-117



Foot Controls, page 111

126-133 Chip Blower in lieu of standard disc type .....$155.00 Add

126-260 Wet/Dry in lieu of standard disc type .....$145.00 Add

126-203 Wet/Dry Chip Blower in lieu of standard disc type .....$205.00 Add

These products contain chemicals known to the State of California to cause cancer and/or reproductive harm. For more information go to www.P65Warning.ca.gov