www.adsdental.com

User's Manual
of
Classic 100/101 Delivery System

P/N:8500968 version：E date：2024-10-08

Copyrights

ADS makes no warranty of any kind with regard to this material , including but not limited to, the implied warranties of merchantability and fitness for a particular purpose. ADS shall not be held liable for any errors contained herein or any consequential or other damages concerning furnishing, performance or use of this material. The information in this document is subject to change without notice . If you find any problems in the documentation, please report them to us in writing. ADS does not warrant that this document is error-free.
No part of this document may be copied, reproduced, altered, or transmitted in any form or by any means, electronic or mechanical, including photocopying, recording, or by any information storage and retrieval system, without prior written permission from ADS.
The document is intended to be used in conjunction with the equipment.

Comments and feedbacks

Please contact us if you have any feedback and opinions on this document：

Add: 1590 S Milliken Ave., unit A, Ontario, CA 91761
Tel: (626) 620 0456
E-mail : sales@adsequip.com
http://www.adsequip.com/

Product service

If you want to get service information, please contact the local dealer authorized by ADS company.
Technical suopport tel：800 488 9708

CONTENTS

1 Introduction..... 5
1.1 Products information..... 5
1.2 Symbols explanation..... 5
2 Specifications..... 7
3 Application notice..... 7
3.1 Attentions..... 7
3.2 Warning information..... 9
4 Sizes.....11
5 Operations.....13
5.1 Water supply system.....13
5.2 Assistant's control.....14
5.3 Cuspidor.....15
5.4 Dentist unit.....16
5.4.1 Level arm adjustments..... 17
5.5 Foot control.....18
5.6 Junction box.....18
6 Functions introduction.....19
6.1 Valves layout of delivery head.....19
6.2 Functions introduction.....19
6.3 3-way syringe adjustment.....22
7 Maintenance and sterilization instructions.....23
7.1 Handpiece tubings cleaning & maintenance.....23
7.2 Clean HVE & SE valves.....23
7.3 Maintain 3-ways syringe.....24
7.4 Clean dirty collector.....26
7.5 Clean the filter.....26
8 Troubleshooting.....26

1 Introduction

1.1 Products information

Unit conversion	
MPa	psi
0.2MPa	29psi
0.4MPa	58psi
0.6MPa	87psi
0.8MPa	116psi

- **Name**：Delivery System
- **Model**：Claasic100/101
- **Working conditions**：

① Ambient temperature：5 ℃～40 ℃;
② Relative humidity：≤80%;
③Nominal Voltage ： AC110 V±22 V;
④Nominal Frequency：60 Hz±1 Hz;
⑤ Water pressure：29psi～58psi;
⑥ Input air pressure ： 72.5psi~101.5psi，Air flow ≥50 L/min.

1.2 Symbols explanations

Table 1

Symbols	Explanations
 Manufacturer	 EU Representative
 Manufacturing date	 Serial Number
 Handle with Care	 Keep dry

Symbols	Explanations
 Refer to instructions	 Notice
 Refer to attatched document	 Backrest Down
 Avoid Electric Shock	 Backrest Up
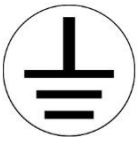 Ground protection	 Chair Down
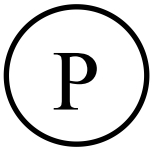 Setup Button	 Chair Up
 Spitting position	 Program Chair Position 1
 Program Chair Position 2	 Program Chair Position 3

2 Specifications

Table 2

Light illuminance	8000-40000 Lux
Max load of delivery head	2.5kg
Ambient temperature	5 ℃～40 ℃
Air supply pressure	72.5psi~101.5psi
Water supply pressure	29~58psi

3 Application notice

3.1 Attentions

Before operating the unit, please read the manual carefully

- Input voltage : AC110V，60Hz.
- Make sure the unit is in good grounding .
- The unit needs professional maintenance..
- All the electrical components and connections should be made by an authorized technician.
- All power and water,air supply must be cut off after work finished every day.
- The equipment should not be operated in the environment of high temperature, high humidity, vibration, flammability, unbalance, or dusty.
- No object can be touched in the unit’s working range.
- Do not touch the bulb and the refector of the dental light when the equipment is working.
- This equipment can not be used in the environment of strong magnetic, electromagnetic.

• The equipment should not be used for purposes other than intended use .

• The water source of the system should be purified tap water, the water used shall conform to the local water standards, water hardness ≤ 450 mg/L .

• The compressed air used for the system requires no water, no oil, and no sanitary defects. The air used in dentistry shall comply with local standards.

• Sterilize the water tubings with once a day with standard disinfectant. Water bottles are only available for use with distilled water.

• Exhaust water in the air pressure regulator filter in time.

• Clean or replace water filter core in time.

• The filter should be cleaned every week .

• The power must be cut off when replacing electrical components.

• The power must be cut off before maintenance and cleaning.

• If you want to install functional accessories in the machine, such as scaler, curing light or other accessories ,they must be high quality products that passed the safety certification .

• Transportation, storage environment requirements：

a. Ambient temperature range： -40 ~ +70° C,

b. Relative humidity range： 20%~90%, Including condensation ,

c. Air pressure range： 12.5~15psi.

• Protect against rain and vibration in transportation, handle with care.

• Packaged equipment should be stored indoor with less than 80% relative humidity , non-corrosive gases, and in good ventilation.

• The waste water, waste disposal must meet the local environmental protection requirements.

• The system should be operated by professional dentist and people with training, or under the guidance of professional dentist. The unauthorized, the untrained,and non-professionals are not free to carry out any operations.

• Equipment maintenance must be done by the company's professional technicians, unauthorized dismantling and maintenance may cause fatal harm to the machine, and no longer enjoy the company's warranty service.

3.2 Warning Information

- You should read and understand the contents of the instructions carefully before operating the equipment.
- Operation should follow all warnings and cautions on the instrument .
- The power socket cable should be in accordance with the standard configuration and the ground wire must be secure .
- Delivery head shall not be stacked with too heavy items (max load 2.5kg) .
- Air pressure of the system has been set before leaving factory, non-professionals are not free to adjust.
- Turn off the main switch of water, gas, power when get off work every day.
- The handpiece shall supply water only when the foot switch is in the state of water supply. (only for 4-pin handpiece tube)
- Hospitals or individual clinics who use the equipment must be equipped with or connected to an amalgam separation device in the waste discharge system .
- The water and air must be exhausted and then cut off the water source and electricity when maintaning or repairing; switch on the power, water and air before the use.
- The 3-way syringe handle and syringe tip should be put into the disinfection bag to disinfect, and then 134 ℃ (pressure 29.8psi) high pressure steam disinfection, disinfection time is no less than 3 minutes.
- Please read the user’s guide before cleaning and disinfecting the high speed turbine and pneumatic micromotor.
- The cover clean with wet cloth and neutral detergent to ensure smooth and elastic leather surface free from corrosion; ABS parts clean with a soft cloth dampened with soap water; the metal baking parts wash with soft cloth dipped in soapy water or wipe with a wax spray.
- Take an extra care with a fiber-optic handpiece to avoid damaging the shining tip and make sure the tip will not come into contact with the treated mixture, keep a certain distance or use a transparent sheet before the first 5 seconds of treatment.
- Any traces left by the mixture on the tool must be removed immediately, remove the fiber-optic handpiece and clean it with a cloth dipped in alcohol.
- Don’t point the light of the fiber-optic handpiece to the patient's eyes for the light may harm to patient's eyes,even cause temporary blindness.
- Connect the polishing handpiece ONLY to the dedicated handpiece tubing (non-standard feature). Any damage caused by connecting to other handpiece tubing, such as valve clogging, is not covered under the warranty. For details of dedicated polishing handpiece tubing, contact dealers or the manufacturer.

4 Sizes(unit:inches)

Classic 100

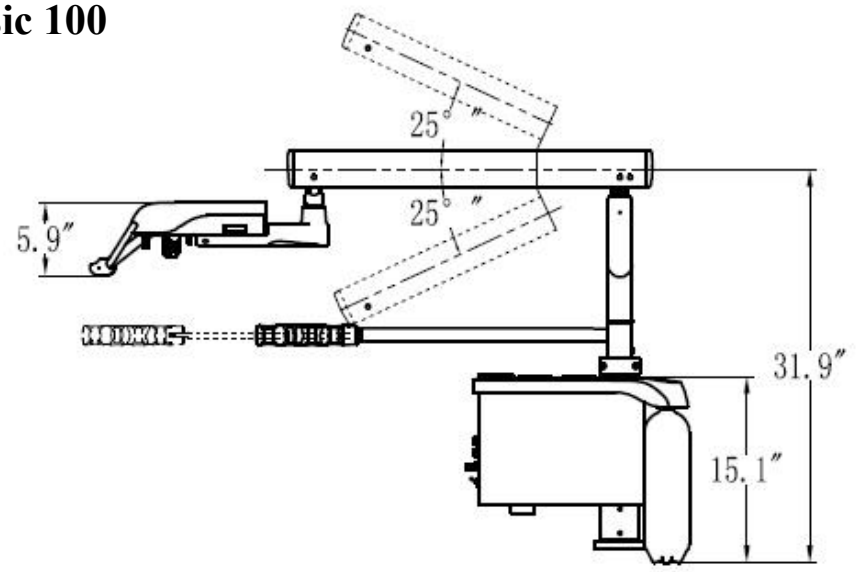

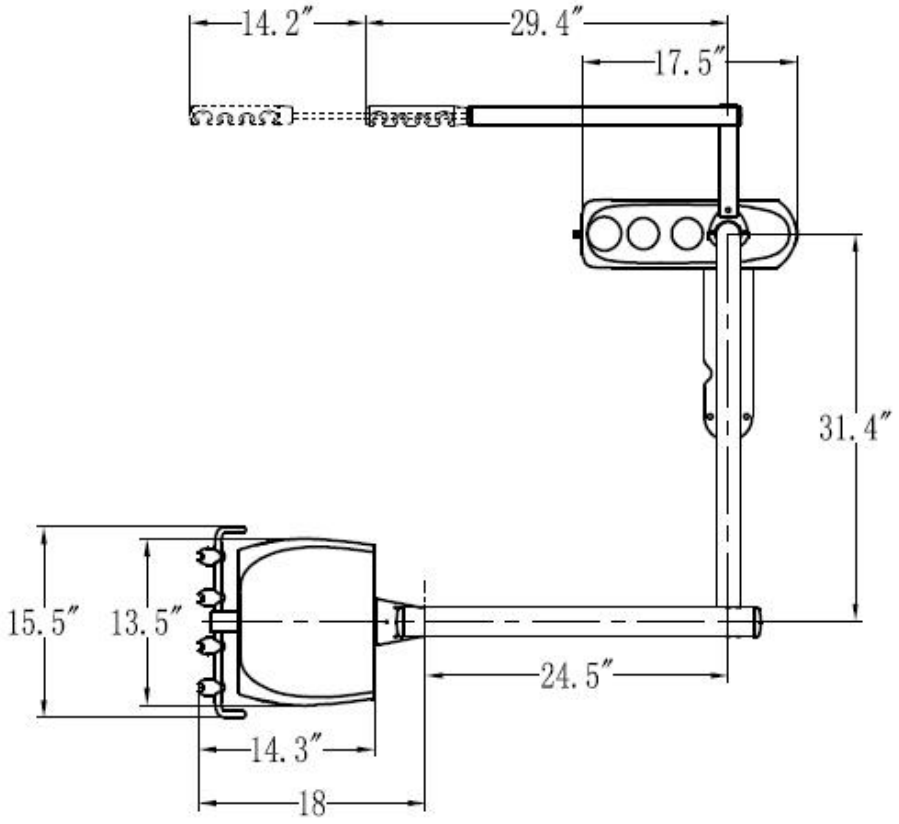

Classic 101

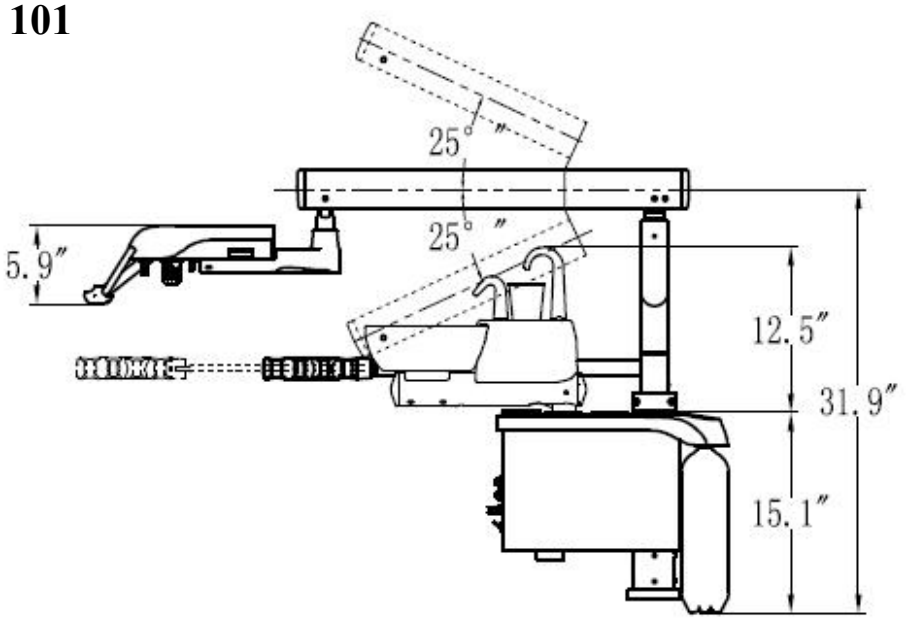

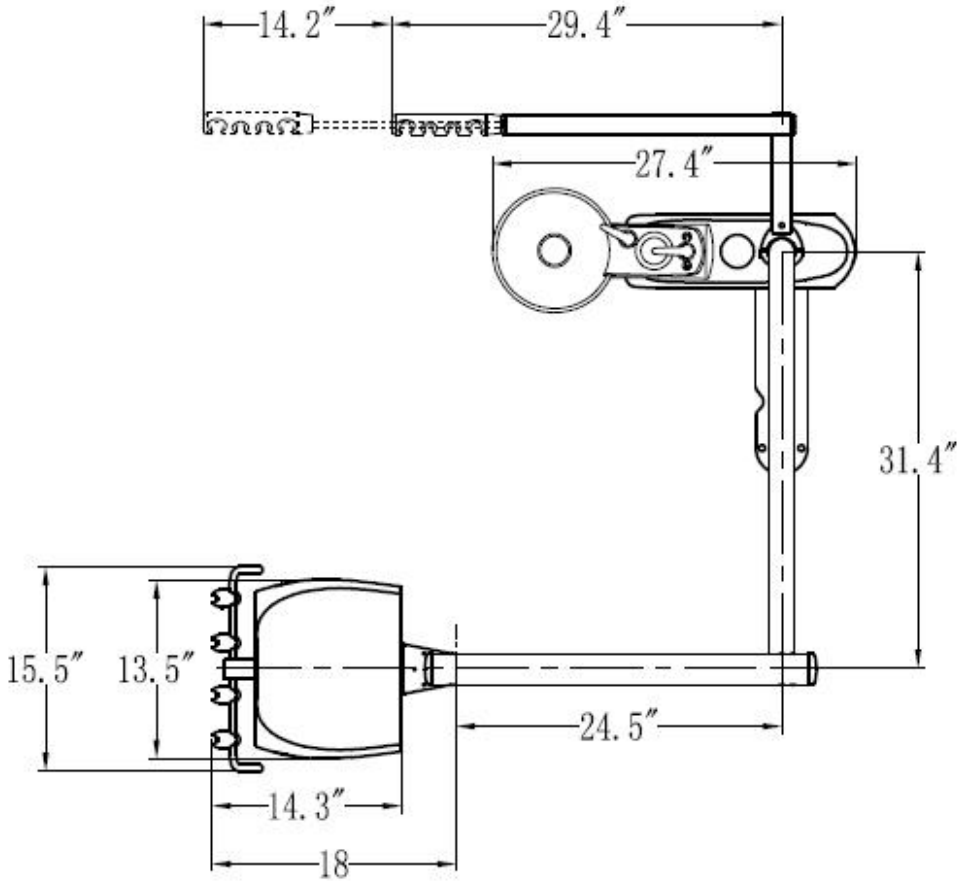

5 Operations

5.1 Water supply system

A 1.5 L quick-disconnect water bottle mounted on the water unit ,provide simple and convenient solution to control water quality.

Figure 1



1. **Air Q/D:** This air output provides 80 psi output to run accessories for the user. Accepts a 3/8in. male quick-disconnect fittin.
2. **Water Q/D:** This water output provides 40 psi output to run accessories for the user. Accepts a 1/4in. male quick-disconnect fitting.
3. **Flow Control:** This needle vale adjusts the water output from the Water Q/D. Rotate counterclockwise to increase output and rotate clockwise to decrease output.
4. **City/Bottle Selector:** This routing valve controls the water systerm input. With the toggle up in the “City”position, water enters the dental unit from the office plumbing. With the toggle down in the”Bottle”position, water enters the dental unit from self-contained water system.

CAUTION: Only water bottles supplied by the manufacturer can be used .Do not use soft drink bottles which are thin walled and may rupture when under pressure.

WARNING: Do not attempt to adjust the water bottle pressure. Bottle pressure is factory pre-set 40psi.Pressurizing the water bottle over 40 psi may cause the bottle to rupture.

5.2 Assistant's control

The assistant's control can rotate as the figure shown.

Figure 2

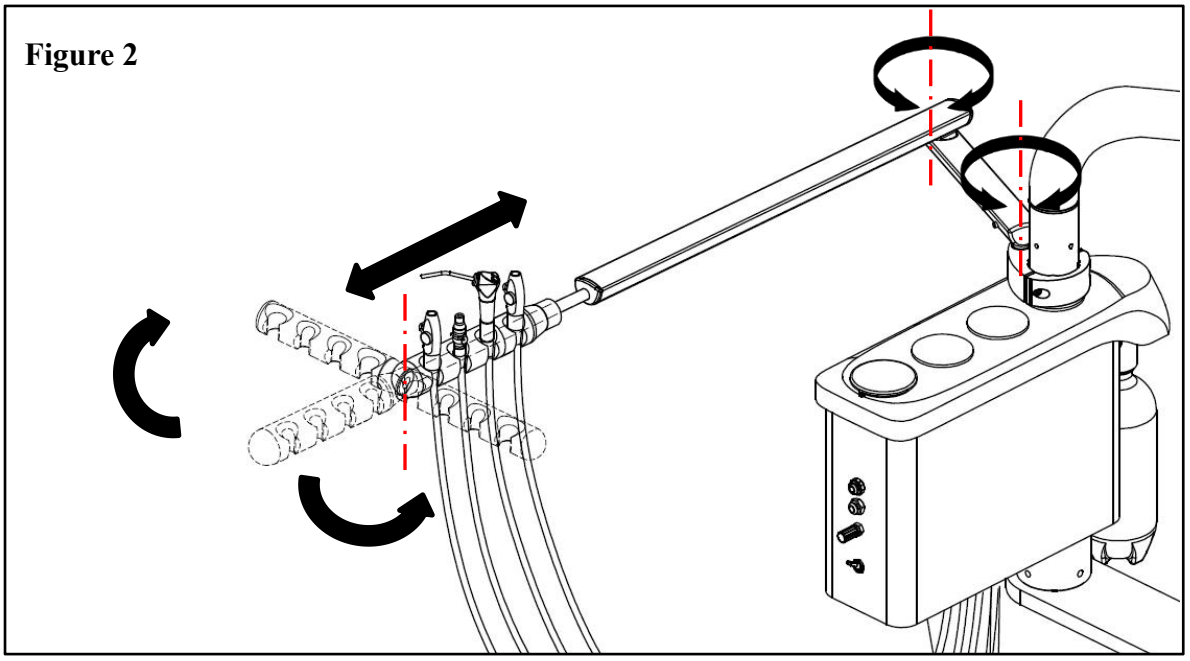

Levelness adjustment of the foldable assistant arm:

Remove the end cap, screw the Allen wrench clockwise to make the arm upward,screw counterclockwise to make the arm downward.Cover the end cap when finished.

Figure 3

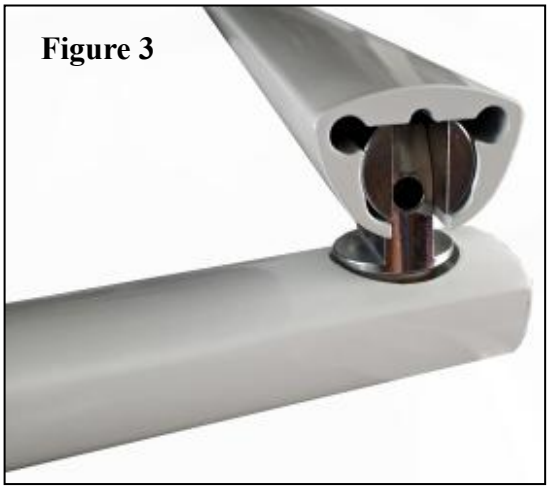

5.3 Cuspidor

The cuspidorl can rotate as the figure shown.

Figure 4

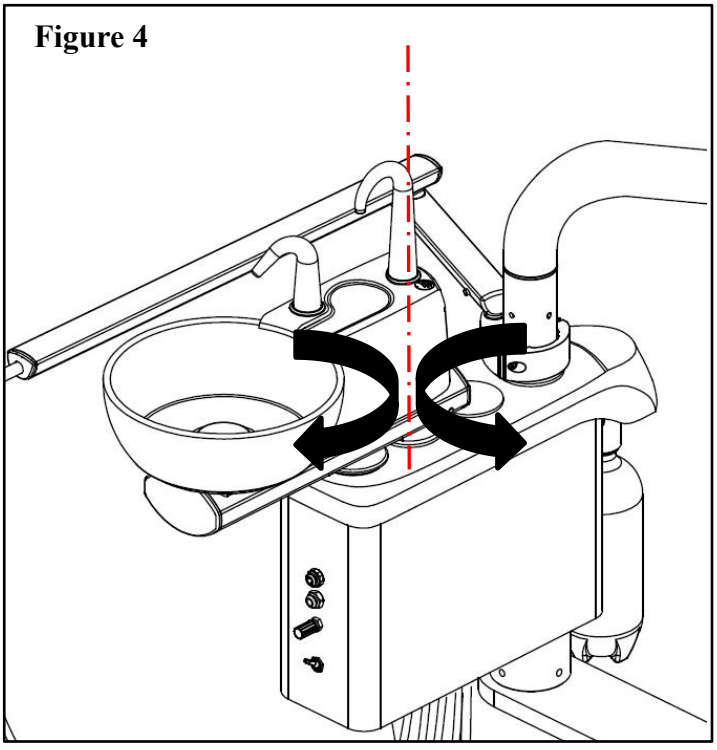

- To realize cup filling function and bowl rinsing function, just press the two buttons beside the cup filling nozzle.
- The bowl rinsing button is designed to have off-delay function.
- A. Cup filling button
- B. Bowl rinsing button

Figure 4

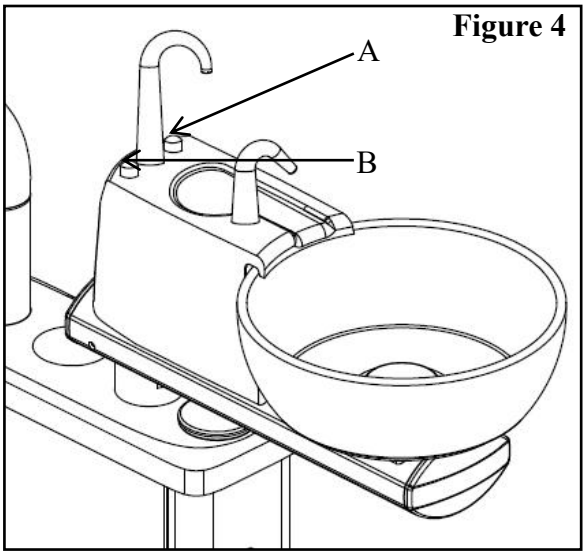

- If you want to change the duration of cup filling or bowl rinsing, you need to remove the two nozzles and take off the upper shell of the cuspidor body,rotate the needle valves clockwwise to extend the time,counterclockwise to shorten the time.

Figure 5 Adjust the needle valves

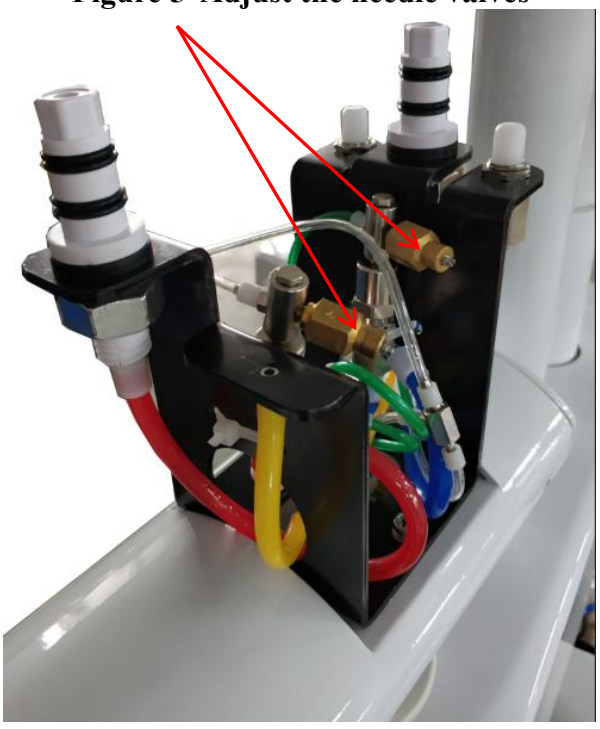

5.4 Dentist unit

The unit can rotate as the figure shown .

Figure 6

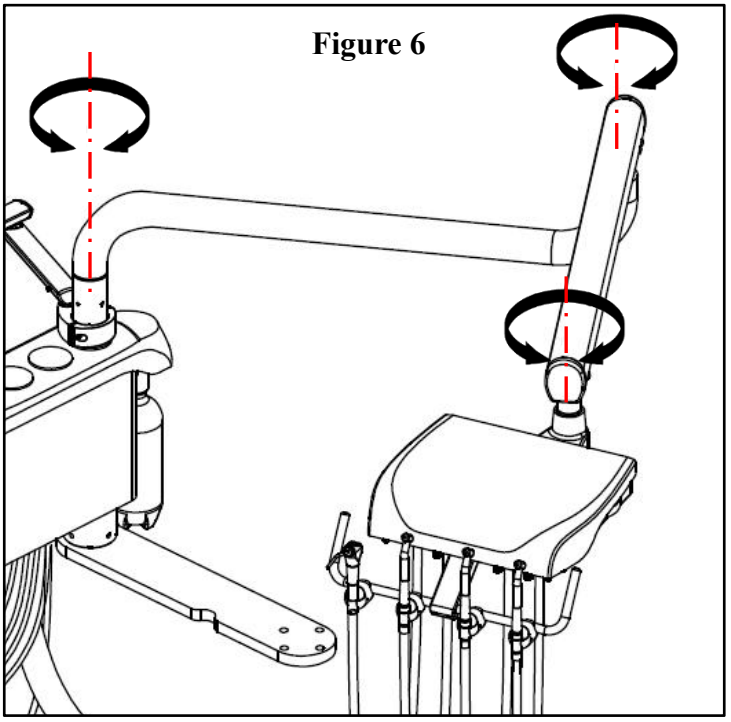

5.4.1 Level arm adjustment

1. Remove the screw caps, change the tightness of the three screws to adjust the damping force of level arm .

   Note: Loosen the screws in counterclockwise, tighten in clockwise.

Tool:
3mm Allen wrench

Figure 7

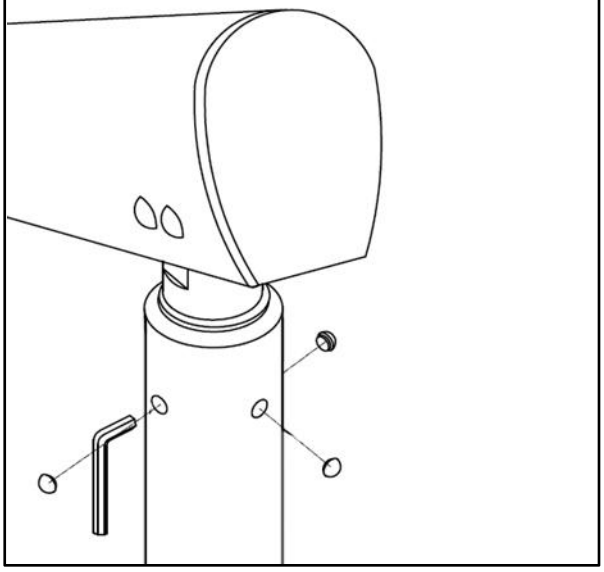

2. Remove the end cover of level arm, adjust the tightness of the screw to get suitable balance force.

   Note: Loosen the screws in counterclockwise, tighten in clockwise.

Tool:
5mm Allen wrench

Figure 8

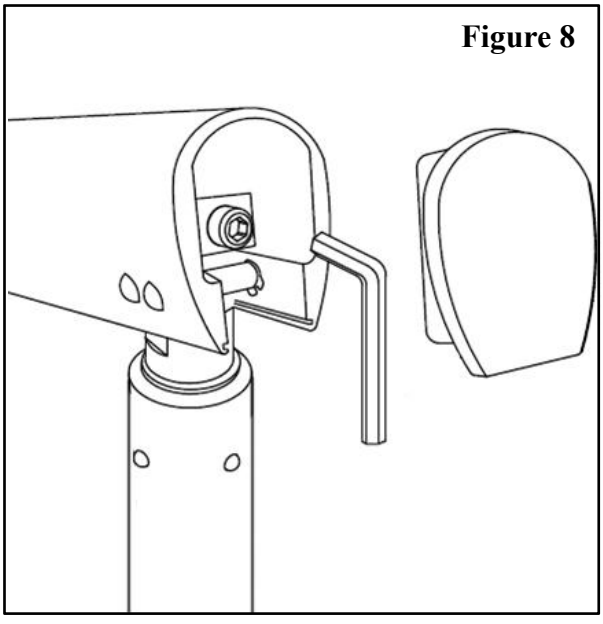

5.5 Foot control

Delivery systems are equipped with wet-dry,variable speed, disc type foot controls. Foot pressure on any part of the control disc can control the flow of air to the active handpiece.

Water Coolant On/Off:

- To close the water coolant, please put the toggle to the left position.
- To open the water coolant, please put the toggle to the right position.

Figure 9

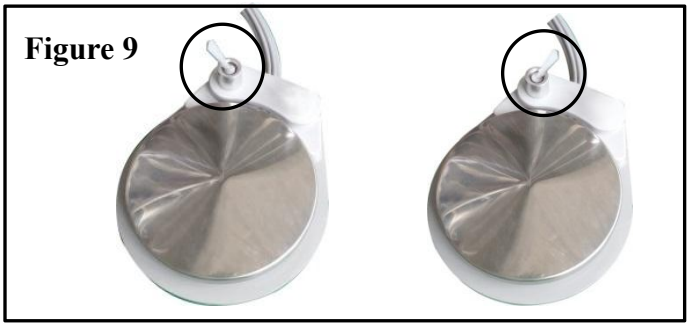

5.6 Junction box

Located in the junction box, the Utility Center comes factory preset at 40psi for Water pressure and 80 psi for Air pressure. All regulator adjustments should be made with the Master On/Off toggle in the On position.

1. To increase Air and/or Water Pressure:

To increase pressure,pull out on the adjustment cap then rotate clockwise to the desired pressure.Push in on the adjustment cap to lock in the adjustment.

2. To Decrease Air and/or Water Pressure:

To decrease pressure, pull out on the adjustment cap then rotate counterclockwise to the desired pressure. Push in on the adjustment cap to lock in the adjustment.

NOTE: When decreasing pressure, pressure must be relieved from the system. This may be achieved pressing the syringe buttons to attain an accurate measurement from the gauges.

6 Functions introduction

6.1 Valves layout of delivery head

Figure 10

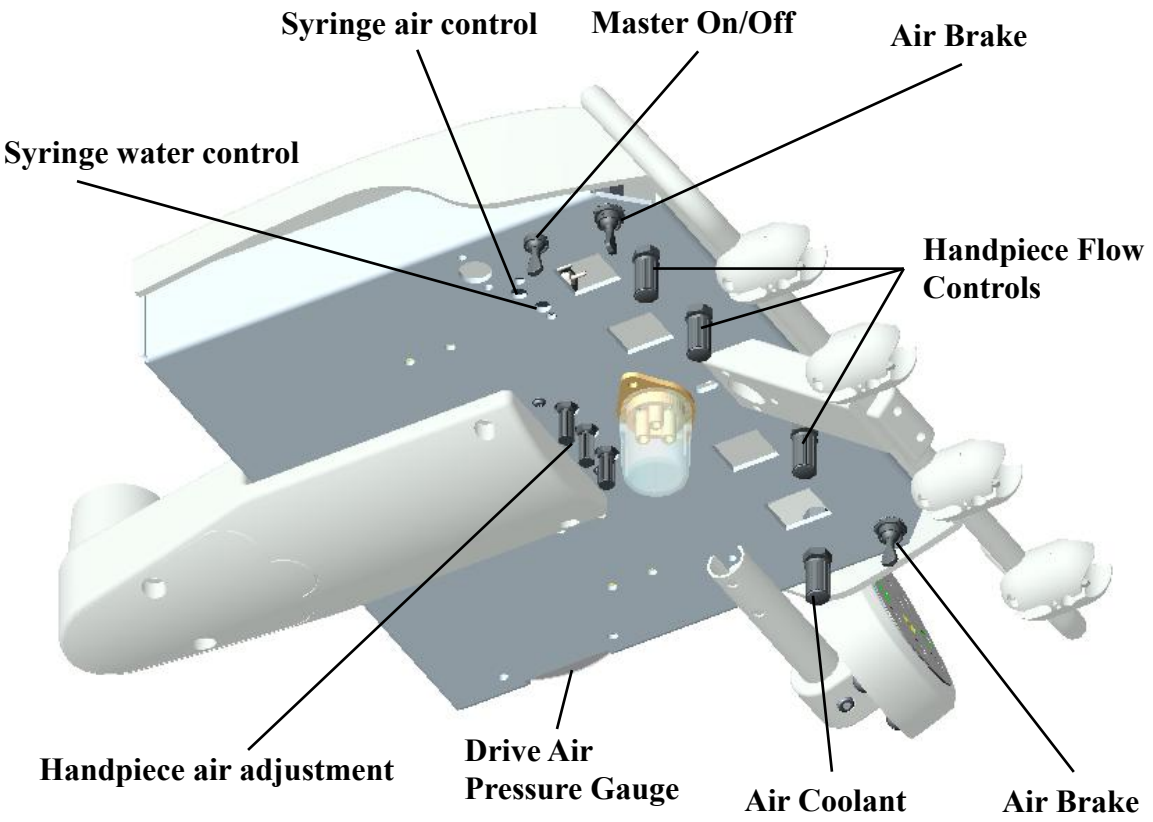

6.2 Functions introduction

Master On/Off: this toggle switch activater the air and water shut-off valves, which control the air and water supplies to the unit.

Air Coolant:

①Take off the handpiece from the holder.

② Find the controller of air coolant.

③Step on the foot control to start the handpiece.

④Adjust the air coolant, to the ideal atomization effect as the standard.

Rotate in counterclockwise to increase flow, clockwise to decrease flow.

Handpiece Flow Controls:

①Take off the handpiece from the holder.
②Find the controller of air coolant.
③Open the cooling water(open the water/no water state valve on the pedal control board).
④Step on the pedal control board to start the handpiece.
⑤Adjust the cooling water flow.

Rotate the control valve counterclockwise to increases water coolant, clockwise to decreases water coolant.

Air Brake:

These momentary toggles activate and release the pneumatic brake in the flex arm.

Syringe air control: Turn on the switch on the syringe and rotate this valve counterclockwise to increase flow, rotate clockwise to decrease flow.

Syringe water control: Turn on the switch on the syringe and rotate this valve counterclockwise to increase flow, rotate clockwise to decrease flow.



CAUTION: Only use water bottles supplied by the manufacturer.Do not use soft drink bottles which are thin walled and may rupture when under pressure.



CAUTION: Avoid operating the handpieses for esterded periods longer htan is required to check gauge pressure.Extended operation without load can damage the handpiece.Do not operate the handpiece without a burr in the chuck.

Figure 11 Handpiece adjustment：

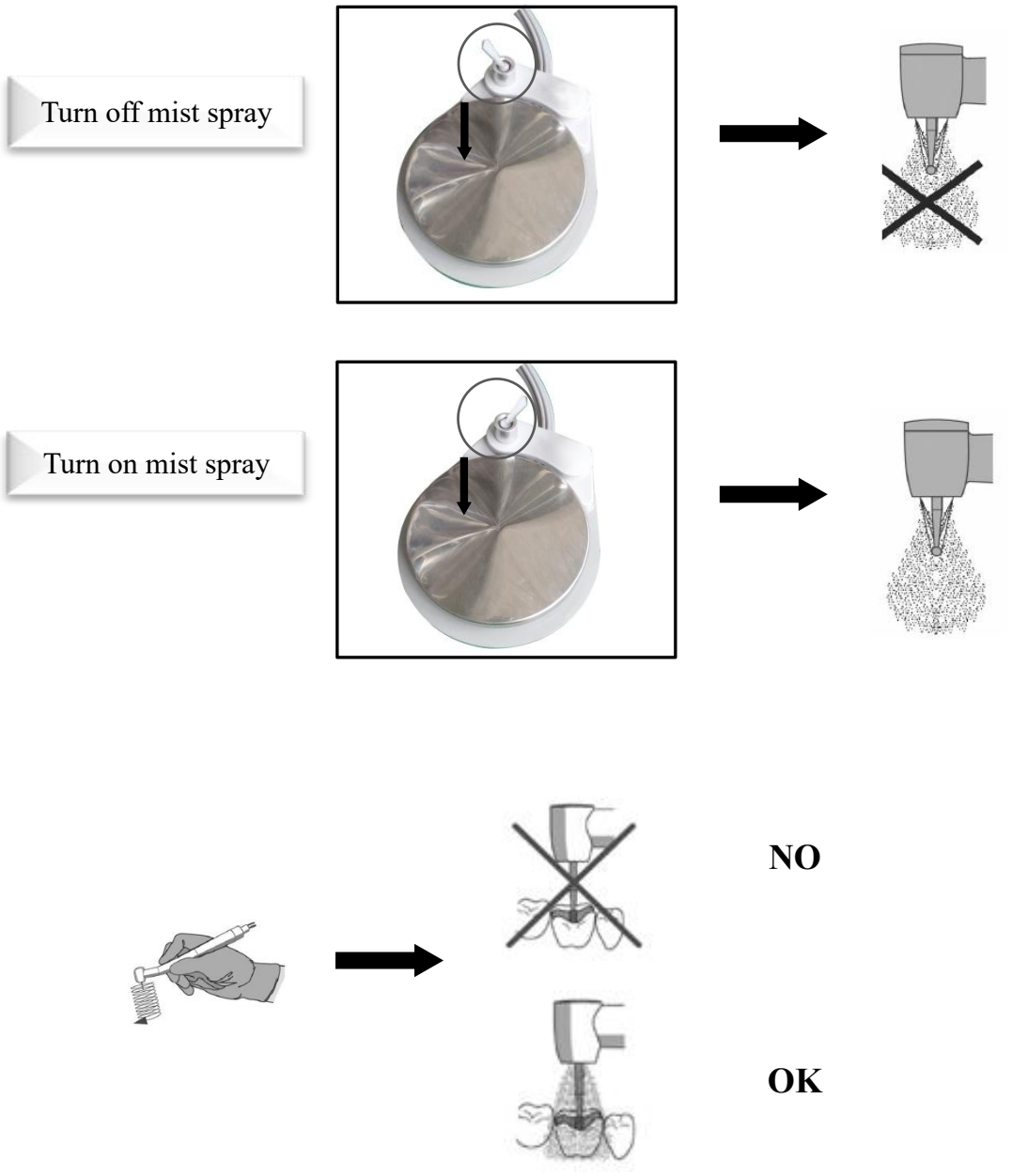

Note： Adjust the drive air pressure to meet the demands of handpiece manufacturer's drive air pressure specification. Refer to your handpiece documentation for the drive air pressure specification.

6.3 3-way syringe adjustment

Figure 12 3-way syringe adjustment

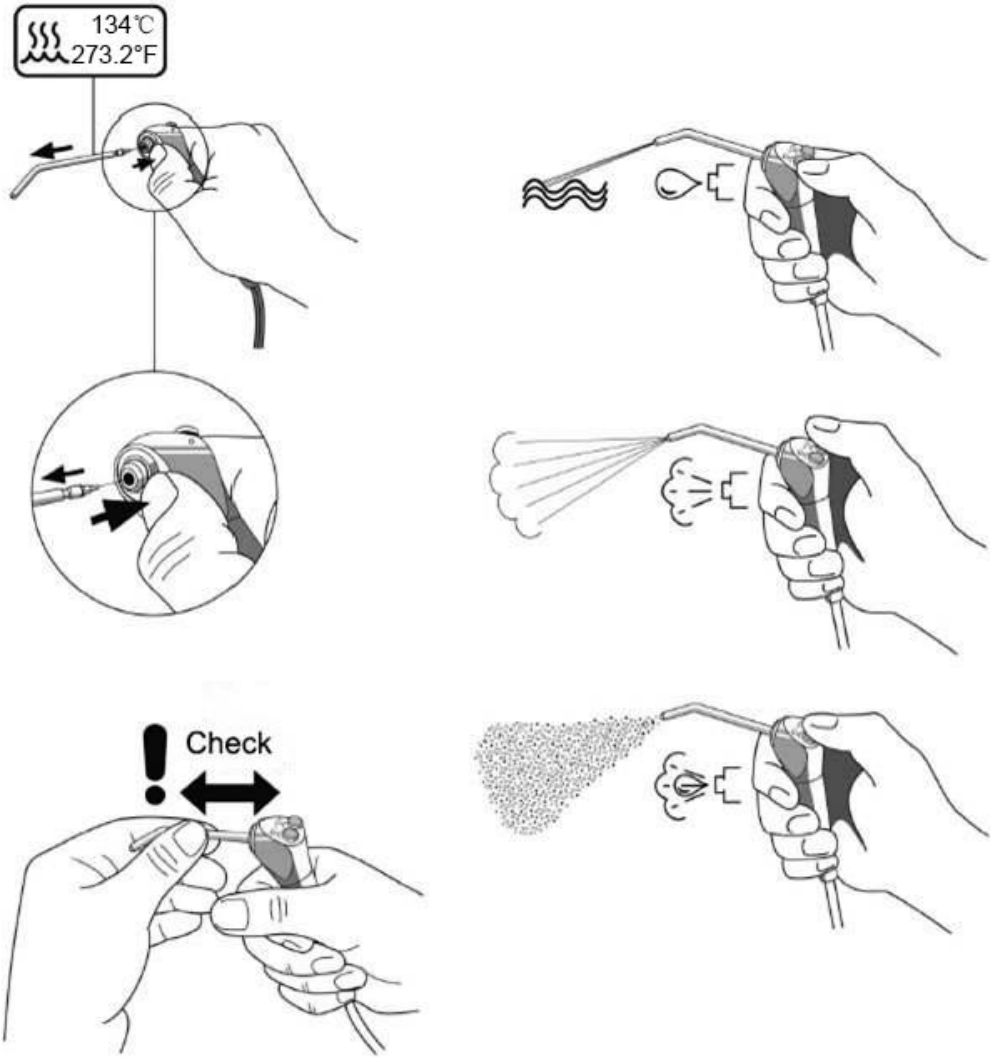

7 Maintenance & sterilization instructions

Touch surface & transfer surface

Touch surface refers to the surface area that need contact in dental treatment while can be potential cross contamination points.

Transfer surface refers to the surface area that contaminated from contacting with the instruments or other inactive object.

ADS company recommends isolating protection for all applicable touch surfaces and transfer surfaces. The partition used must be a plastic film approved the Food & Drug Administration. The plastic films should be taken off and discarded after the treatment of each patient.

7.1 Handpiece tubings cleaning & maintenance

Flush the tubings independently or together.

After each patient:

1. Disconnect the handpiece before flushing the conduit.
2. Gather handpiece tubings that use water coolant and hold them over a sink, cuspidor bowl, or basin.
3. Hold the tubings so that the water is directed away from you and into the receptacle .(Figure 21.)
4. Flush the tubing continuously about 20~30 min.

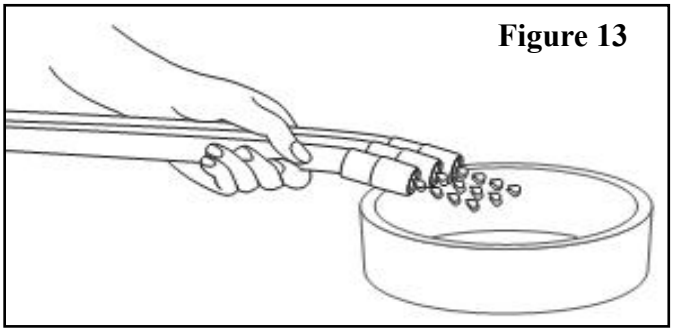

Figure 13

7.2 Clean HVE & SE valves

Suggestions:

- Suck 2 cups of fresh water in every two hours during working time;
- Suck 1 liter of water after daily working.

7.3 Maintain 3-ways syringe

To ensure the proper functioning and longevity of the 3-ways syringe, regular maintenance is necessary.

Maintenance Frequency: at least once a month.

Daily Usage Precautions:

- Before each use, perform a preliminary operation check away from the patient's mouth. If you notice any looseness, vibration, air leaks, or water leaks, stop using the device immediately and have it serviced by a professional from your dealer.
- Do not clean the tip or other components of the syringe with hydrogen peroxide or disinfectants, as this can cause corrosion of the parts.
- If air, water, or spray functions malfunction, stop using the device immediately and contact your dealer.

Warning！

- Do not use a deformed syringe tip! There is a risk of danger and damage to the product!
- Any form of dropping or impact can cause damage to the syringe. Avoid dropping or impacting the syringe!

Procedure

1. Turn off the air supply and water supply from the dental unit.
2. Use an M4 hex wrench to uninstall the tip locking retainer.
3. Remove remaining components, such as the O-ring and spring, in sequence.



Figure 1 Angled Syringe Tip Locking Retainer Uninstallation



Figure 2 Straight Syringe Tip Locking Retainer Uninstallation

4. Push out the button retention pin. Figure 3 shows an example on the angled syringe.
5. Remove buttons and other components, such as the O-ring and spring, in sequence.



Figure 3 Syringe Button Uninstallation

6. Rinse the syringe components with purified water, which is to prevent blockages in the tubing, connectors, and seals.
7. Reinstall the components in reverse order.

7.4 Clean dirty collector

Figure 14

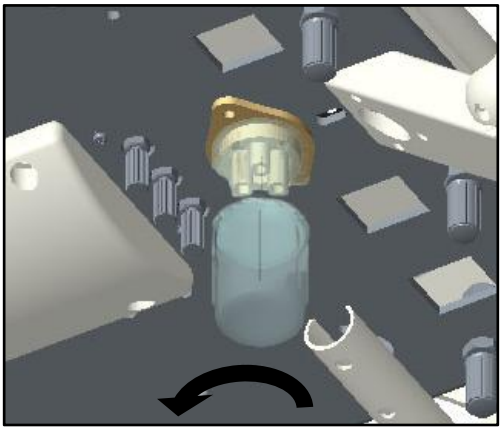

Keep weekly maintenance, increase maintenance times when use frequently .

To clean the collector:

1.Unscrew the dirty collector counterclockwise and remove it;
2.Discard used cotton.
3.Put some cotton into dirty collector;
4.Tighten the dirty collector clockwise.

7.5 Clean the filter

The filter aids in preventing solids from entering the suction system . To ensure a good working state of the suction system, please clean the filter screen at least twice a week.

To clean the filter：

1. Close the suction system.
2. Pull out the filter ,remove the filter screen and clean the solids.
3. Reinstall the filter.

Figure 15

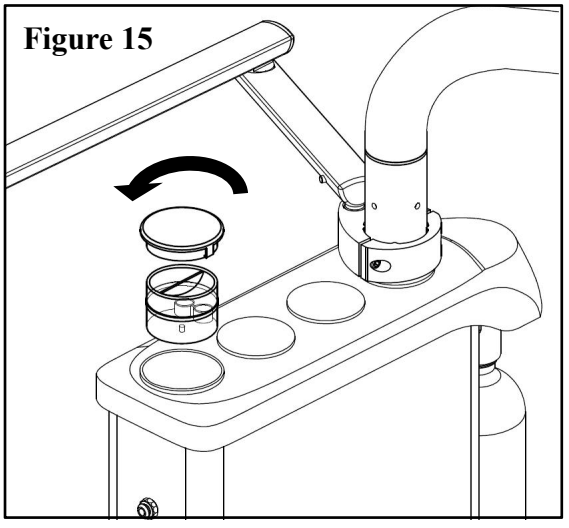

8 Troubleshooting

Please contact your local dealer for help if there is malfunction occured in your system.

We reserve the right to make any alterations which may be due to technical improvements.





ADS Dental System Inc.

Add: 1590 S Milliken Ave., unit A, Ontario, CA 91761
Tel: (626) 620 0456
E-mail: ads@adsequip.com
http://www.adsequip.com/