BEAVERSTATE DENTAL SYSTEMS

Service Manual

S-6307

3 HP Automatic Euro Top Post Mount Doctor's System with Flex Arm

Rev 5 - 1-10-20

900-021M

S-6307

Installation

1. Install the chair adapter as per instructions provided with the chair adapter.
2. Place the shipping carton in the desired location. Remove the unit with arm system and unit from the shipping carton.
3. Insert the unit post into the chair adapter hub. Level, then tighten the set screws to secure the post in place.
4. Place the adapter in the unit post and insert the umbilical into the unit post, pulling it out through the bottom. Slide the arm knuckle into the adapter.

WARNING

The arm system is spring loaded. Before removing the safety tie strap, firmly grasp the flex arm and hold

5. Cut the safety tie strap and carefully release the arm system.
6. Rotate the flex arm 180^0 in a counter-clockwise direction so that the umbilical tubings do not become crimped or twisted.
7. Remove the rigid arm end cap and tighten the cap screw to set the stop limits for the flex arm. Replace the end cap.

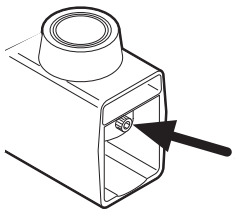

8. Install master valve assemblies, with filter and regulator, onto the manual shut-off valves. (Pressures are preset at the factory: 80 psi air, 40 psi water).
9. Feed the supply tubings from the umbilical through the 3/4" hole in the utility center housing. Screw in the spiral tubing to act as a strain relief.
10. Connect the supply tubings as shown in the Utility Center Template & Guide.

Final Adjustments

Check air pressure, adjust to 80 psi if necessary.
Check water pressure, adjust to 40 psi if necessary.
Test handpieces for proper function.
Test syringe for proper pressure and function.
Adjust flex arm tension, if necessary.

Operation

1. Turn on the master switch located on the left side of the control head.
2. The handpiece is automatically activated when the wand is pulled forward.
3. Depress the foot control to activate each handpiece. Pressure is shown on the gauge for the handpiece being used.
4. Individual handpiece pressure adjustments are located on the autoblock inside the control head. To adjust the pressure to each handpiece:
   a. Turn adjustment screw *clockwise* to decrease the handpiece pressure.
   b. Turn adjustment screw *counter-clockwise* to increase the handpiece pressure.

CAUTION

When adjusting the handpiece pressure, do not over-tighten the screws. Damage may result.

5. Activate the water spray to the handpiece by flipping the toggle for the water located on the right side of the control head.
6. Water coolant flow adjustments are located underneath the control head.
7. Arm brake switch is located on the right side of the control head. The brake is on when the toggle is positioned towards the rear (right position). Pull the lever forward (left position) to release the arm brake, adjust arm to desired location and move lever to the rear (right position) to reapply the brake.

Handpiece Purge

The purge switch, located on the left side of the control head, flushes fresh water through the water coolant system. Guidelines from the Center for Disease Control (CDC) recommends that each handpiece be flushed (purged) 20 to 30 seconds between patients and several minutes at the beginning of each day. Handpieces must be removed from the holder to activate the purge system.

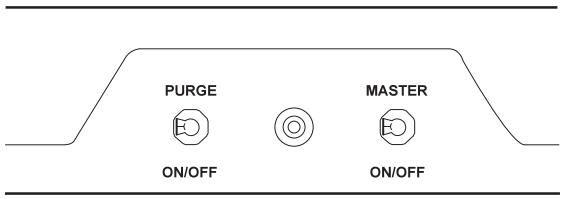

Control Panel–Left Side

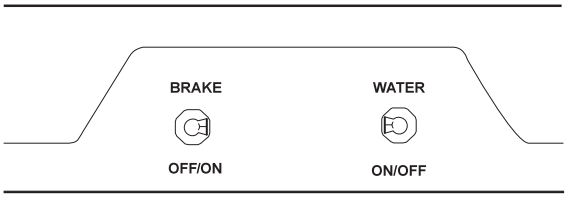

Control Panel–Right Side

Troubleshooting

Symptom Handpiece lacks power.

Possible Causes

A. Improper supply pressure from compressor (80 psi).
B. Check handpiece pressure adjustment on unit.
C. Air filter may be plugged.
D. Pinched supply tubing.
E. Defective handpiece gasket at connection with tubing.
F. Defective handpiece.

Symptom Water coolant does not shut off when foot control is released.

Possible Causes

A. Adjust air pressure to 80 psi—water pressure to 40 psi.
B. Foot control is not exhausting.
C. Defective water relay valve.

Symptom More than one handpiece is operating.

Possible Causes

A. Handpiece is not all the way in the holder.
B. Improper adjustment on pilot valve in the handpiece holder.
C. Defective shuttle valve to gauge.

Symptom Insufficient water coolant.

Possible Causes

A. Adjust coolant flow valve.
B. Water filter may be plugged.
C. Handpiece may be plugged.
D. Pinched supply tubing.
E. Improper adjustment of water relay valve.

Symptom Water coolant is running from handpiece while in the holder.

Possible Causes

A. Water pressure too high.
B. Air pressure too low.
C. Handpiece holder out of adjustment.

Symptom Water coolant is running continuously.

Possible Causes

A. Purge switch is on (on applicable systems).
B. Water pressure to high.
C. Handpiece holder out of adjustment.
D. Defective water relay valve.

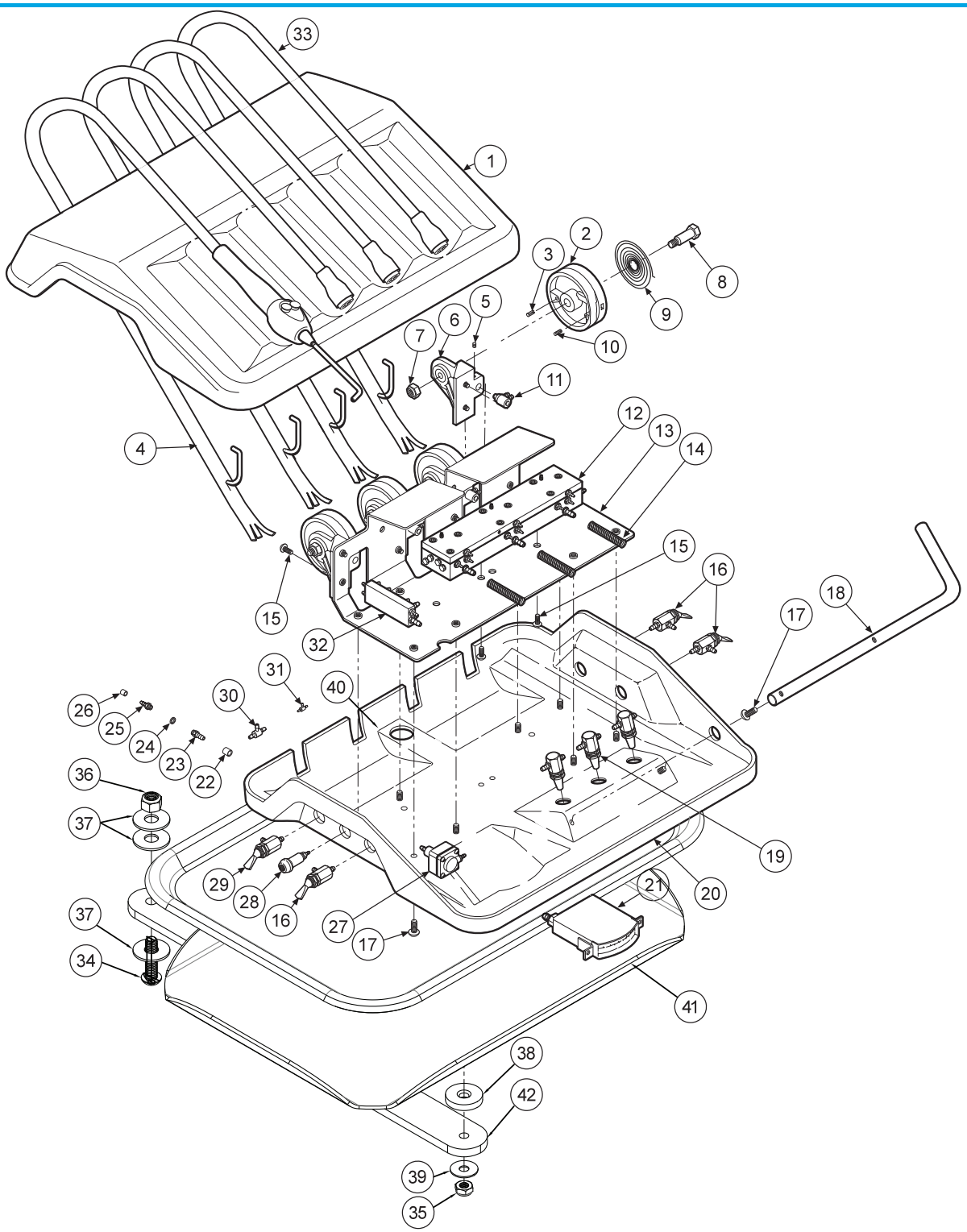

ITEM	PART DESCRIPTION	PART NUMBER	QTY
1	Cover	107-092	1
2	Euro Cam	116-001	4
3	Pin, 1/8" x 1/2"	009-029	4
4	Euro Wand Assembly	116-008	1
5	Set Screw, 4-40 x 3/16"	005-001	4
6	Euro Cam Bracket	116-002	4
7	Nylon Locknut, 10-32	002-027	4
8	Euro Pivot Shaft	116-005	4
9	Euro Cam Spring	008-033	4
10	Set Screw, 6-32 x 3/8"	005-012	4
11	Automatic Holder Valve	122-044	3
12	Automatic Handpiece Block	125-130	1
13	Chasis	107-090	1
14	Spring, Euro	008-035	3

ITEM	PART DESCRIPTION	PART NUMBER	QTY
15	Screw, 6-32 x 3/8"	001-041	10
16	3-way Toggle Valve	120-000	3
17	Screw, 10-32 x 3/8"	001-070	4
18	Holder Bar	107-093	1
19	Needle Flow Valve	121-000	4
20	Base	107-091	1
21	Gauge	026-003	1
22	Ferrule, 1/4"	117-008	5
23	Barb, 10-32 x 1/8"	022-010	4
24	Plastic Washer, 1/4"	003-001	14
25	Barb, 10-32 x 1/16"	022-009	11
26	Ferrule, 1/8"	117-007	48
27	Water Relay	123-000	3
28	Indicator	026-020	1

ITEM	PART DESCRIPTION	PART NUMBER	QTY
29	Momentary Valve	120-005	1
30	Shuttle Valve	014-012	1
31	Plastic Tee, 1/16"	022-033	2
32	Handpiece Manifold	023-001	1
33	Euro Wand Assembly	116-009	4
34	Screw, 5/16-18 x 1-1/4"	001-184	1
35	Nut 1/4-20	002-023	1
36	Lock Nut, 5/16-18	002-033	1
37	3/8 Nylon Washer	003-010	3
38	Tray Mount Spacer Washer	003-022	1
39	Tray Mount Friction Washer	003-023	1
40	Tray, 9-3/4 x 13-1/4	010-001	1
41	Tray Holder	107-047	1
42	Euro Tray Arm	107-094	1

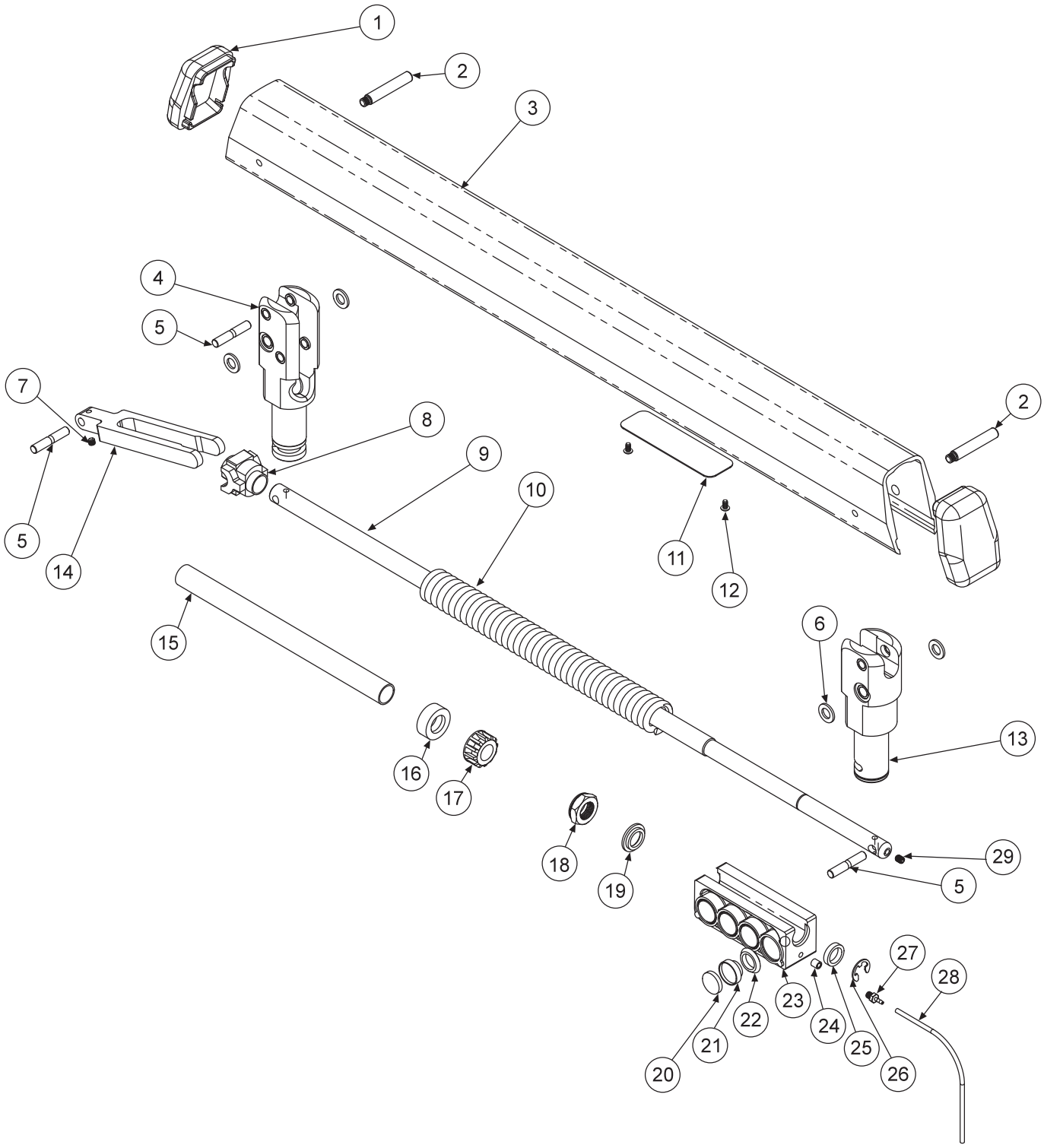

ITEM	PART DESCRIPTION	PART NUMBER	QTY
1	End Cap	106-319	2
2	Pin, Arm Housing	009-030	2
3	Arm Housing	106-314	1
4	Arm Knuckle	106-322	1
5	Pin Rod	009-031	3
6	Plastic Washer	003-040	4
7	Set Screw, 10-32 x 3/16"	005-037	1
8	Spring Slider	106-311	1
9	Rod	106-327	1
10	Spring	008-019	1

ITEM	PART DESCRIPTION	PART NUMBER	QTY
11	Plug Adjustment	106-329	1
12	Screw, 6-32 x 1/4"	001-133	2
13	Head Knuckle	106-337	1
14	Arm Fork Link	106-318	1
15	Sleeve.	106-321	1
16	Seat, Flex Arm Spring	106-320	1
17	Adjustment Nut	106-325	1
18	Nut, Hex, Jam 9/16-18, Nylon Insert	002-011	1
19	Collar, w/Shoulder, Brake, Flex.	106-338	1
20	Brake Pad	106-313	8

ITEM	PART DESCRIPTION	PART NUMBER	QTY
21	Piston, Brake	106-317	8
22	U-Cup.	017-204	8
23	Brake Housing.	106-316	1
24	Ferrule, Delrin, 1/8"	117-007	1
25	Brake Collar, Threaded	106-324	1
26	Ring, Truarc, 5133-43	006-004	1
27	Barb 10-32 x 1/16"	022-059	1
28	1/8" Supply Line, Black	115-028	11
29	Socket Set Screw, 10-32 x 1/4"	005-035	1

FLEX ARM WITH PNEUMATIC BRAKE
106-336

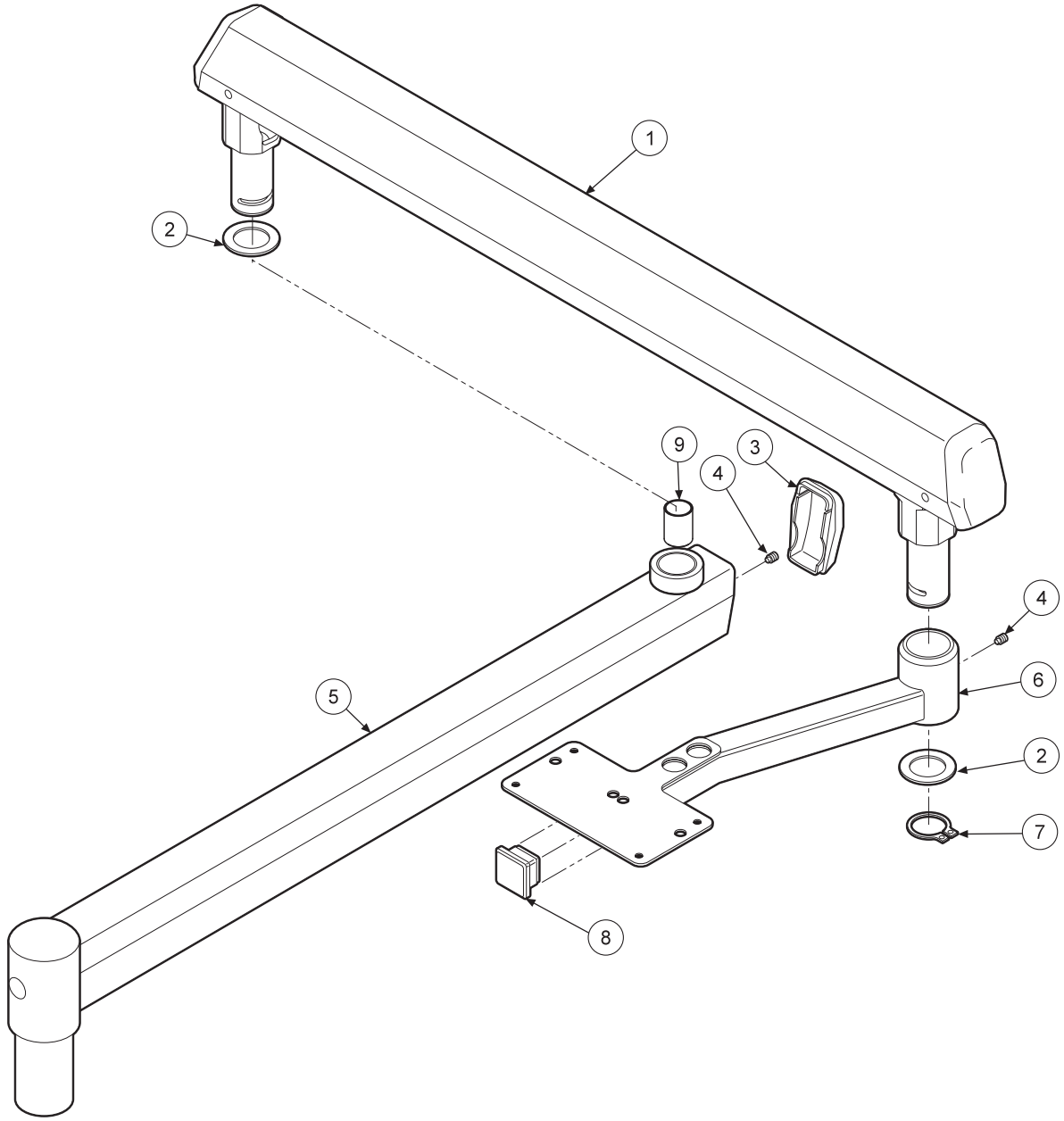

ITEM	PART DESCRIPTION	PART NUMBER	QTY
1	Flex Arm	106-336	1
2	Thrust Washer, Small	003-038	2
3	End Cap	106-326	1
4	Set Screw, Half Dog	005-007	2
5	Rigid Arm	106-360	1
6	Pivot Mount	106-355	1
7	Snap Ring	006-002	1
8	Plug Square, 3/4"	010-042	1
9	Bronz Bushing	013-019	1

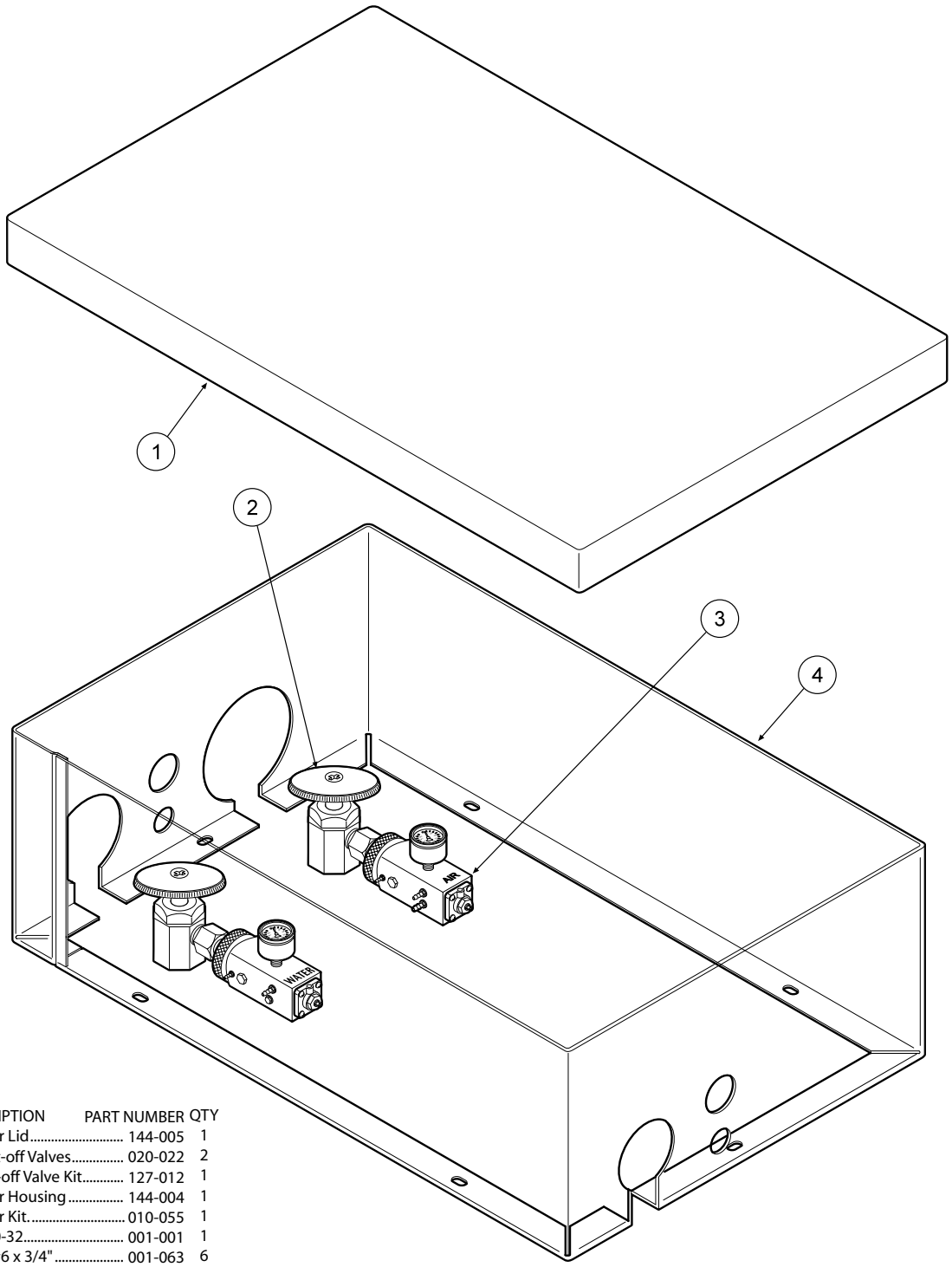

ITEM	PART DESCRIPTION	PART NUMBER	QTY
1	Utility Center Lid	144-005	1
2	Manual Shut-off Valves	020-022	2
3	Master Shut-off Valve Kit	127-012	1
4	Utility Center Housing	144-004	1
	Utility Center Kit.	010-055	1
	Plug ,10-32	001-001	1
	Screw, #6 x 3/4"	001-063	6
	Plastic Washer, 1/4"	003-001	2
	Plug, 3/4"	010-005	2
	Plug, 1-3/8"	010-008	1
	Plug, 1/2"	010-013	1
	Plug, 1-1/2"	010-015	1
	Plug, 2-1/4"	010-017	1
	Plug, 13/16"	010-016	2
	Barb, 10-32 x 1/16"	022-009	1
	Barb, 10-32 x 1/8"	022-010	1
	Ferrule, 1/8"	117-007	4

UTILITY CENTER
144-018

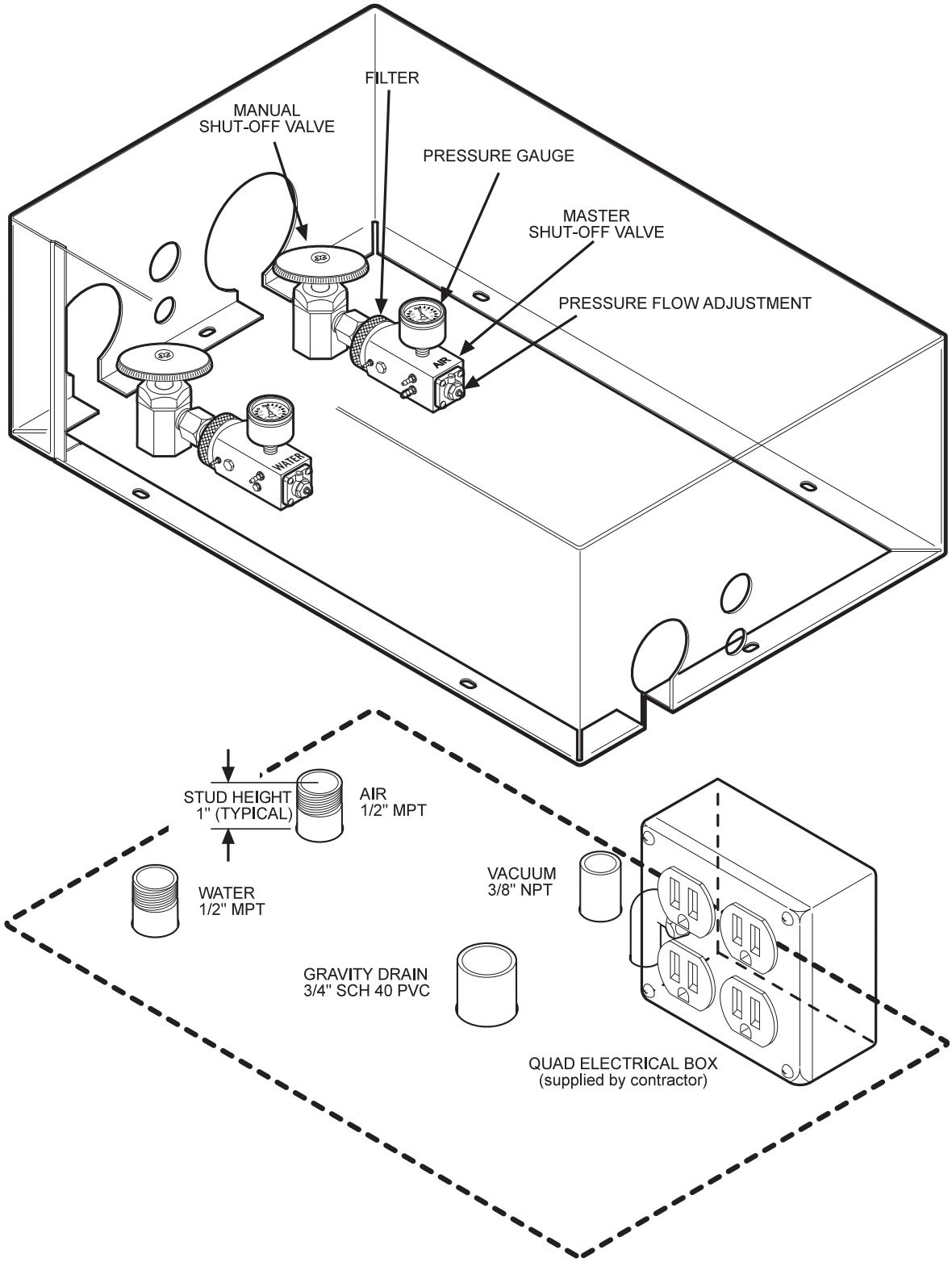
FILTER
MANUAL
SHUT-OFF VALVE
PRESSURE GAUGE
MASTER
SHUT-OFF VALVE
PRESSURE FLOW ADJUSTMENT
AIR
WATER
STUD HEIGHT
1" (TYPICAL)
AIR
1/2" MPT
WATER
1/2" MPT
VACUUM
3/8" NPT
GRAVITY DRAIN
3/4" SCH 40 PVC
QUAD ELECTRICAL BOX
(supplied by contractor)

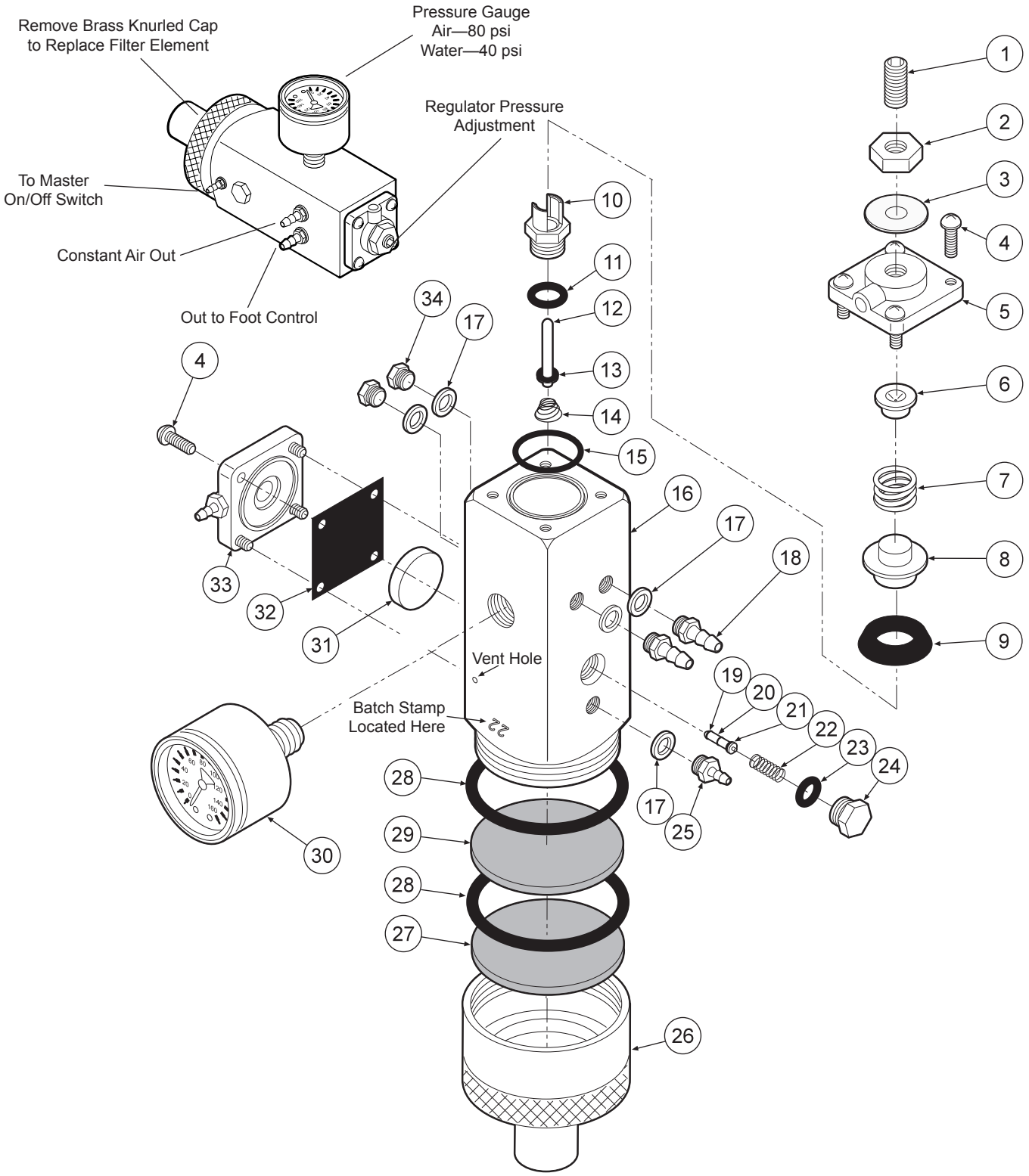

ITEM	PART DESCRIPTION	PART NUMBER	QTY
1	Set Screw, 1/4-20 x 5/8"	005-024	1
2	Jam Nut, 1/4-20	002-006	1
3	Washer	003-015	1
4	Screw, 6-32 x 3/8"	001-041	8
5	Cap	127-033	1
6	Spring Seat	127-043	1
7	Spring	008-008	2
8	Cup Seat	127-044	1
9	Cup Seal	017-200	4
10	Seat	127-026	3
11	O-Ring, 008	017-008	2
12	Stem	127-024	1
13	O-Ring, 004	017-104	1
14	Spring	008-028	1
15	O-Ring	017-018	1
16	Body	127-040	1
17	Plastic Washer, 1/4"	003-001	5
18	Barb, 10-32 x 1/8"	022-010	2
19	O-Ring, 001	017-501	2
20	Stem	127-045	1
21	O-Ring, 003	017-103	1
22	Spring	008-040	1
23	O-Ring, 007	017-007	1
24	Plug	020-026	1
25	Barb, 10-32 x 1/16"	022-009	1
26	Cap Inlet	127-041	1
27	Filter Element, 100 Micron	119-005	1
28	O-Ring, 018	017-022	2
29	Filter Element, 35 Micron	119-004	1
30	Gauge	026-001	1
31	Piston	123-014	1
32	Gasket	127-031	1
33	Cap	123-030	1
34	Plug	001-001	2

MASTER VALVE
127-010 AIR

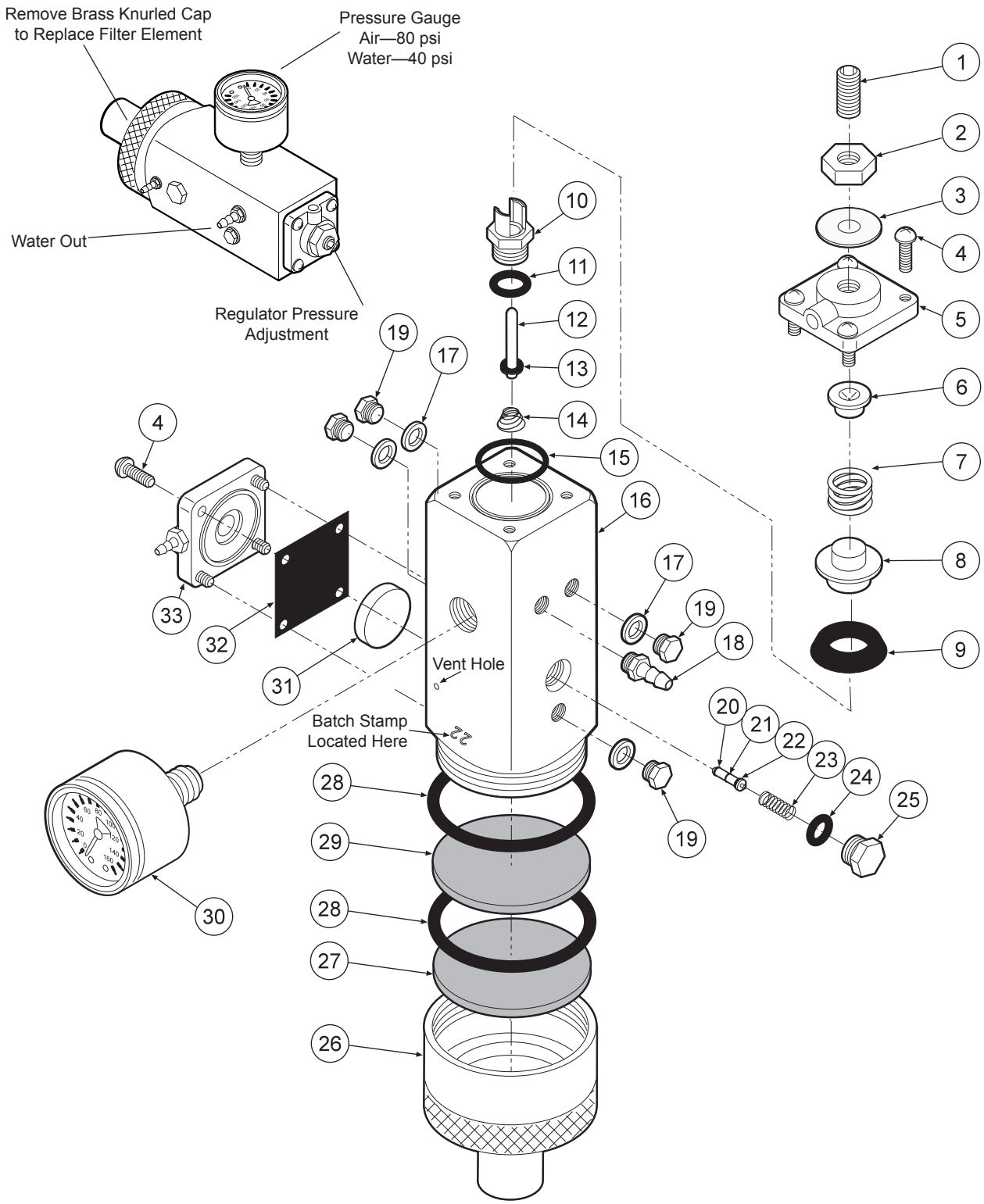

ITEM	PART DESCRIPTION	PART NUMBER	QTY
1	Set Screw, 1/4"-20 x 5/8"	005-024	1
2	Jam Nut, 1/4"-20	002-006	1
3	Washer	003-015	1
4	Screw, 6-32 x 3/8"	001-041	8
5	Cap	127-023	1
6	Spring Seat	127-043	1
7	Spring	008-008	1
8	Cup Seat	127-044	1
9	Cup Seal	017-200	1
10	Seat	127-026	1
11	O-Ring, 008	017-008	1

ITEM	PART DESCRIPTION	PART NUMBER	QTY
12	Stem	127-024	1
13	O-Ring, 004	017-104	1
14	Spring	008-028	1
15	O-Ring	017-018	1
16	Body	127-040	1
17	Plastic Washer, 1/4"	003-001	1
18	Barb, 10-32 x 1/8"	022-010	1
19	Plug	001-001	4
20	O-Ring, 001	017-501	2
21	Stem	127-045	1
22	O-Ring, 003	017-103	1

ITEM	PART DESCRIPTION	PART NUMBER	QTY
23	Spring	008-040	1
24	O-Ring, 007	017-007	1
25	Plug	020-026	1
26	Cap Inlet	127-041	1
27	Filter Element, 100 Micron	119-005	1
28	O-Ring, 018	017-022	2
29	Filter Element, 35 Micron	119-004	1
30	Gauge	126-001	1
31	Piston	123-014	1
32	Gasket	127-031	1
33	Cap	123-012	1

MASTER VALVE
127-010 WATER

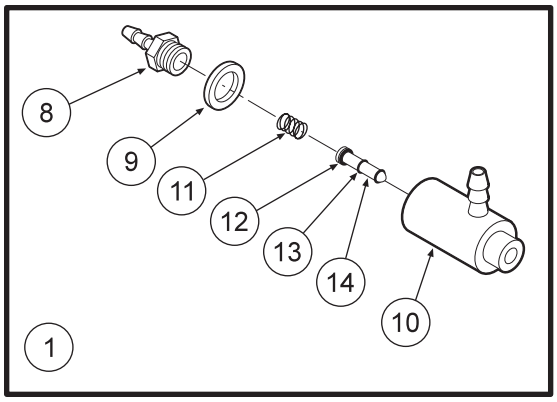

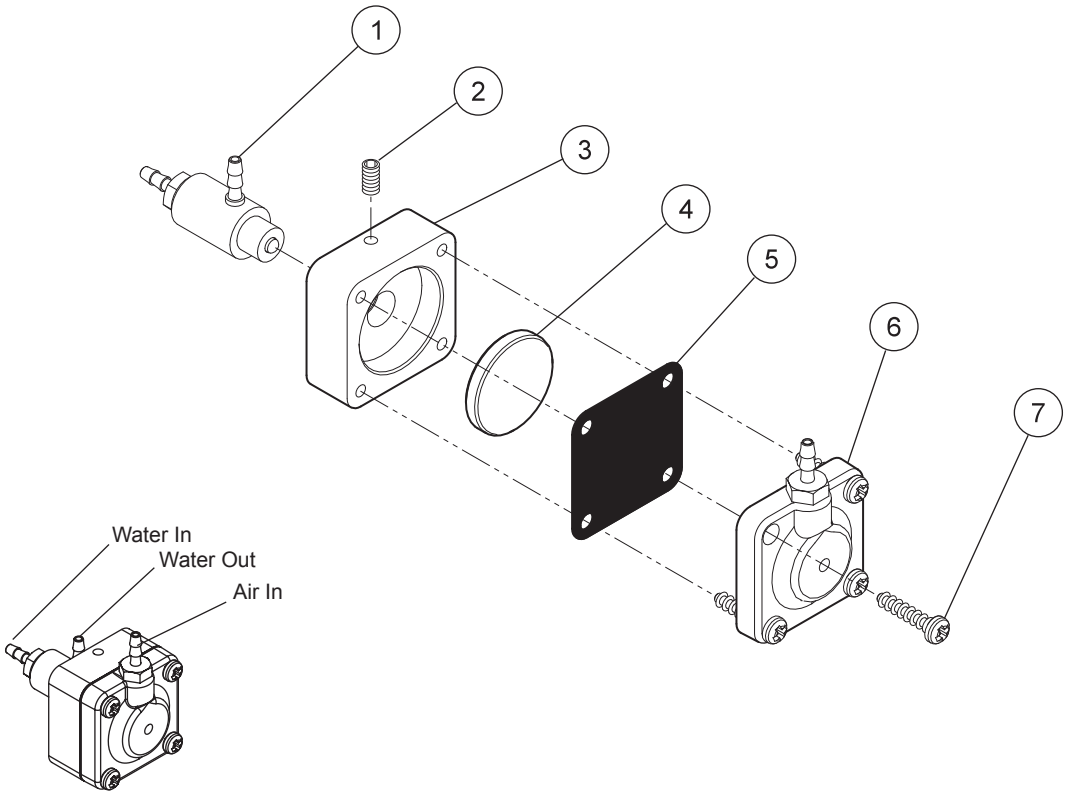

Water Relay Valve 123-000

ITEM	PART DESCRIPTION	PART NUMBER	QTY
1	Cartridge Body Assembly	123-018	1
2	Set Screw, 4-40 x 5/8"	005-028	1
3	Body	123-013	1
4	Piston	123-014	1
5	Diaphragm	127-031	1
6	Cap	123-012	1
7	Screw, #6 x 1/2"	001-267	4
8	Barb, 10-32 x 1/16"	022-009	1
9	Plastic Washer, 1/4"	003-001	1
10	Valve Body	123-017	1
11	Spring	008-011	1
12	O-Ring, 002	017-502	1
13	O-Ring, 001	017-501	2
14	Stem	123-015	1

NON-RETRACTION WATER RELAY VALVE
123-000

CAUTION

When adjusting the handpiece pressure, do not over-tighten the screws. Damage may result.

The automatic control block is the control center for your dental unit.

Individual handpiece pressure adjustments are located on the autoblock. To adjust the pressure to each handpiece:

a. Turn adjustment screw *clockwise* to decrease the handpiece pressure.
b. Turn adjustment screw *counter-clockwise* to increase the handpiece pressure.

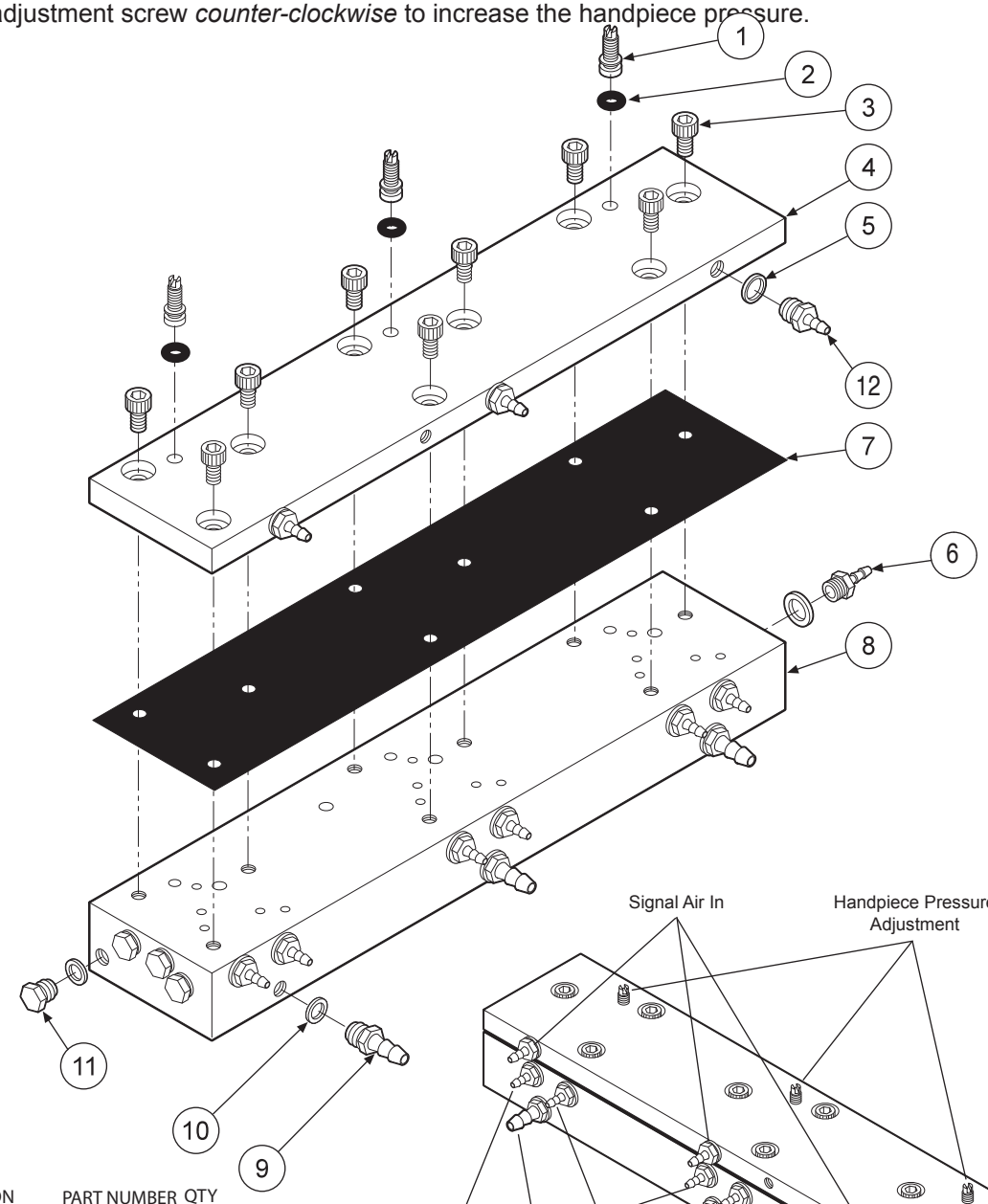

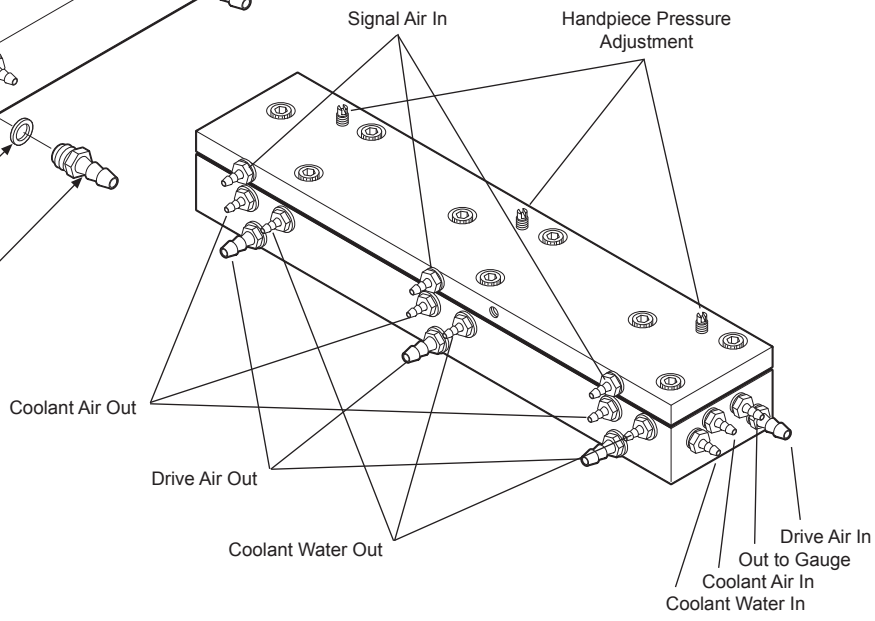

ITEM	PART DESCRIPTION	PART NUMBER	QTY
1	Adjusting Stem	125-023	3
2	O-Ring, 021	017-021	3
3	Screw, 6-32 x 1/4"	001-131	9
4	Cap.	125-132	1
5	Plastic Washer.	003-030	3
6	Barb, 10-32 x 1/16"	022-009	9
7	Diaphram	125-116	1
8	Body	125-131	1
9	Barb, 10-32 x 1/8"	022-010	4
10	Plastic Washer, 1/4"	003-001	13
11	Plug, 10-32	001-001	4
12	Barb, 8-32 x 1/16"	022-040	3

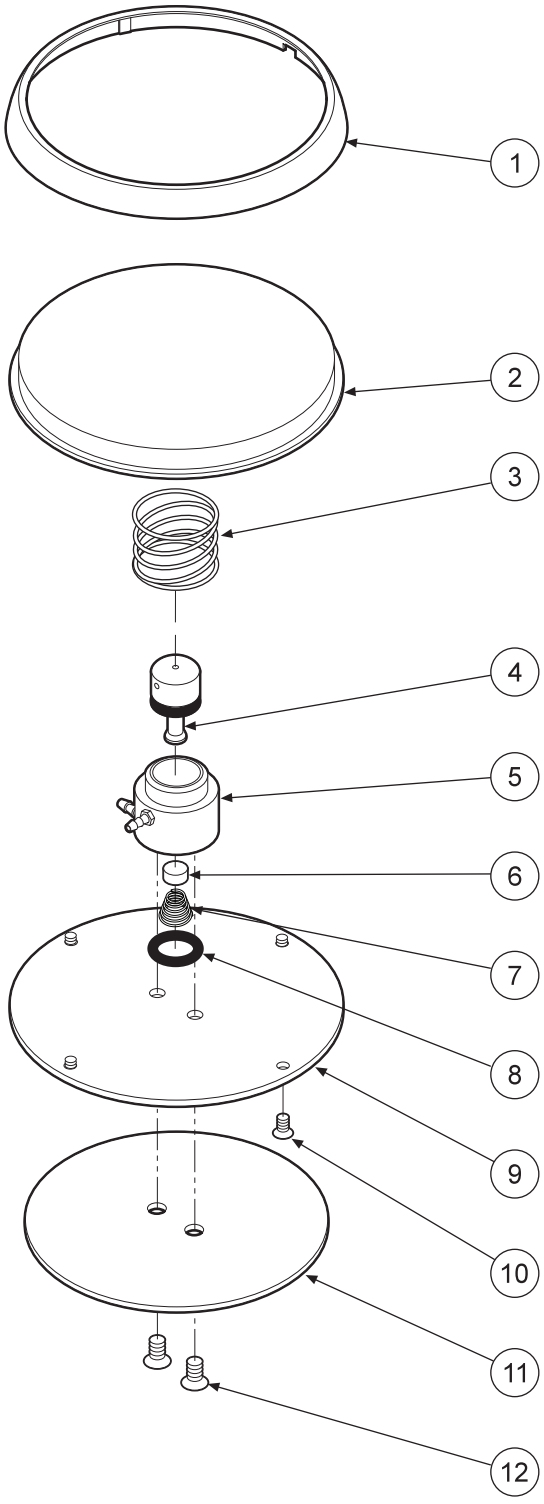

ITEM	PART DESCRIPTION	PART NUMBER	QTY
1	Ring	126-202	1
2	Cover	126-201	1
3	Spring	008-005	1
4	Stem (Includes 017-012 o-ring)	126-005	1
5	Body	126-004	1
6	Poppet	126-006	1
7	Spring	008-006	1
8	O-Ring, 013	017-013	1
9	Baseplate	126-003	1
10	Screw, 4-40 x 1/4"	001-005	4
11	Rubber Pad	126-007	1
12	Screw, 6-32 x 1/4"	001-004	2

FOOT CONTROL
126-200

BEAVERSTATE DENTAL SYSTEMS

Euro 3 Handpiece Automatic control
S-6307

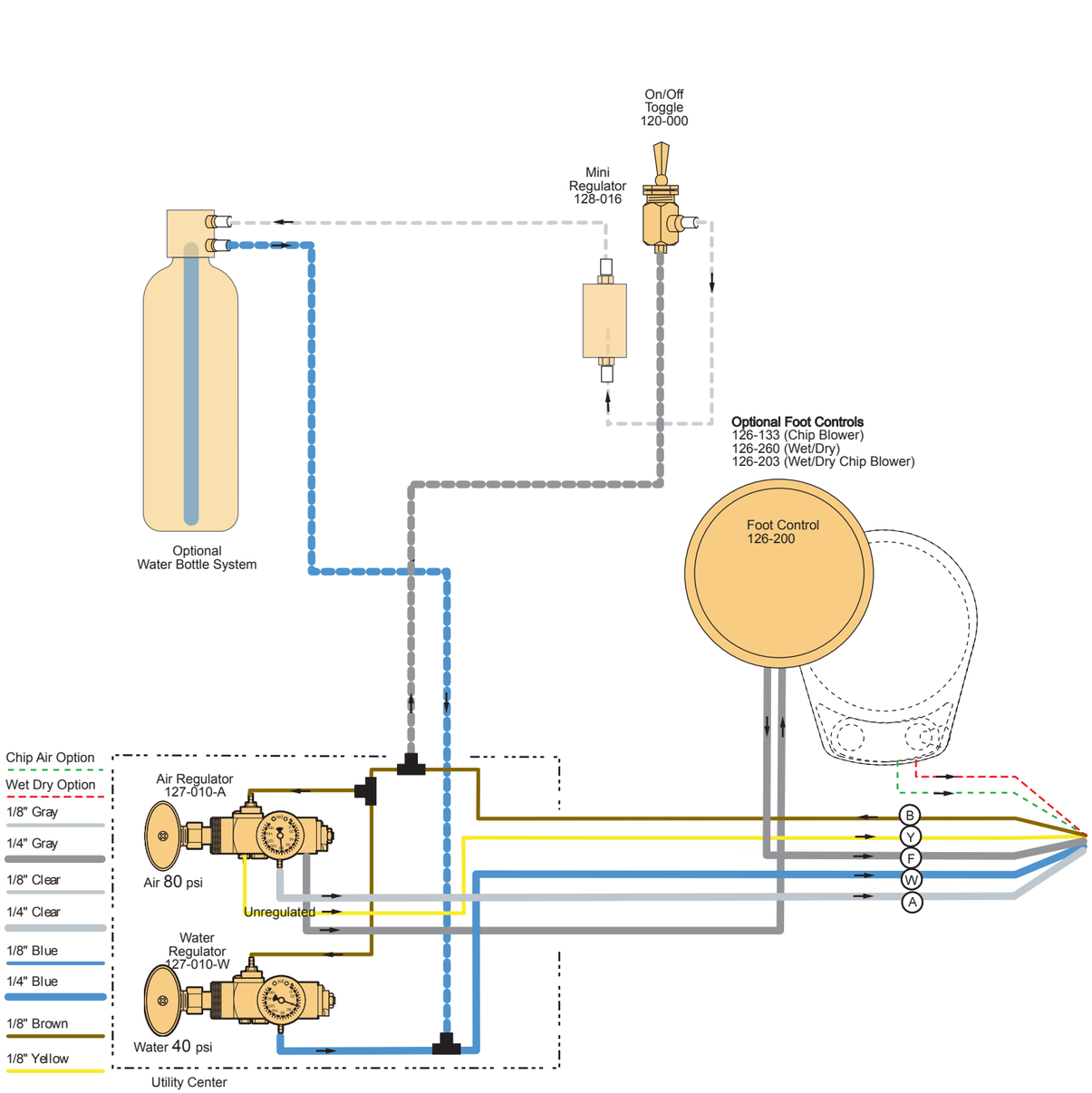

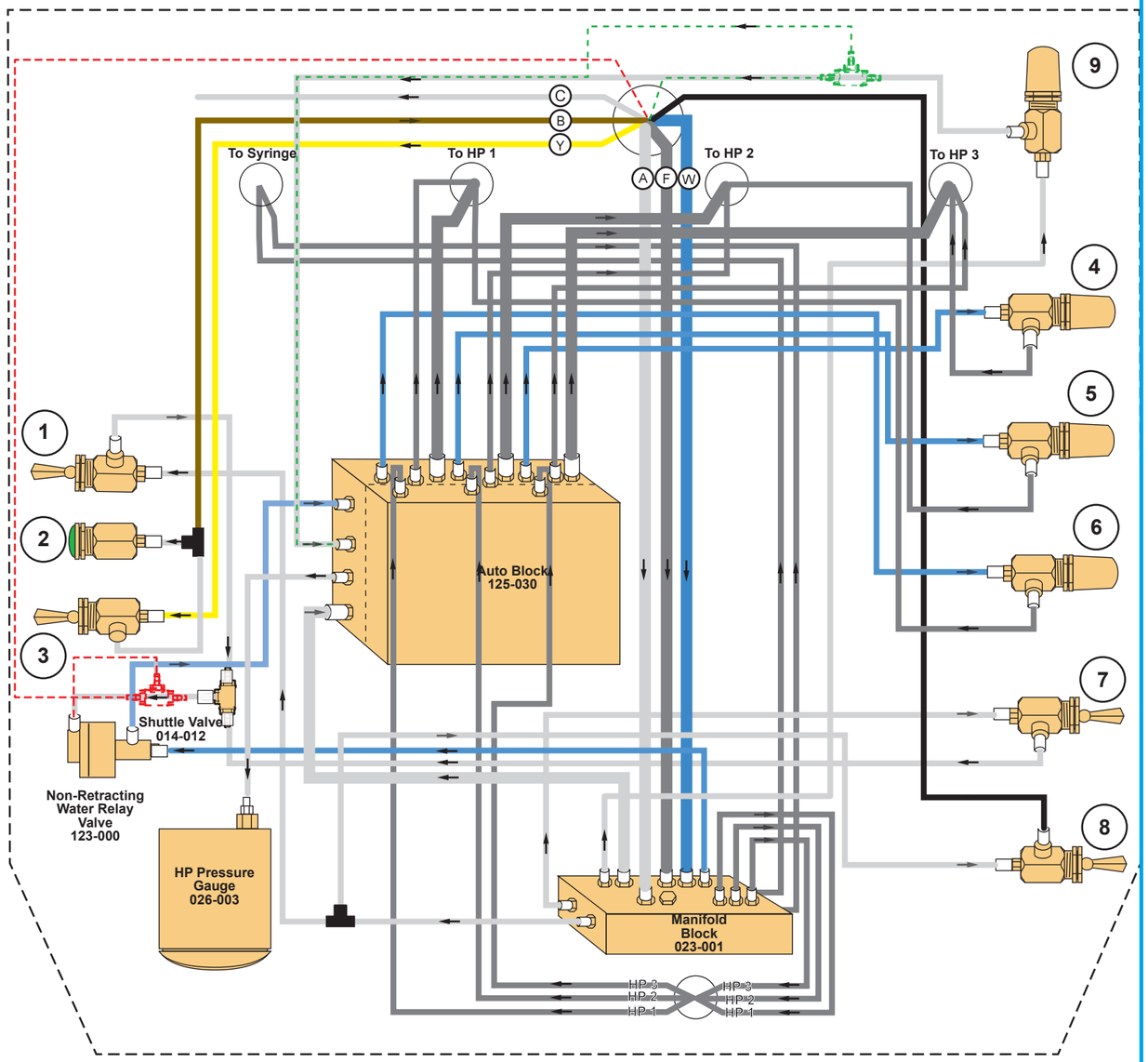

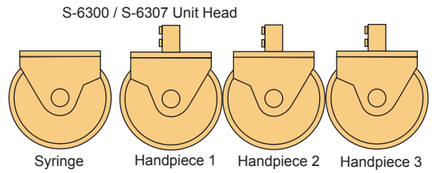

Junction Box

Circled letters indicate connection at Junction Box

- (A) 1/4" Clear - Constant Air In
- (B) 1/8" Brown - On/Off (flow out) to M.V.
- (F) 1/4" Gray - In From Foot Control
- (W) 1/4" Blue - Water In
- (Y) 1/8" Yellow - On/Off (flow In) from M.V.

WARRANTY

BDS warranties its product to be free of defects in material and workmanship for SEVEN FULL YEARS from the date of purchase on all units. Auto-blocks and standard foot controls are covered by a LIFETIME warranty when factory installed as part of a complete dental system. Upholstery has a TWO YEAR warrany and does not cover normal wear, stains, cuts or tears. Our LED lights have a FIVE year Warranty and our halogen light has a ONE year Warranty. Operatory chair motors feature a TEN year warranty. All warranty is limited to repair or replacement by BDS. Products returned to the factory and determined to be defective will be repaired or replaced free of charge at discretion of BDS. The warranty does not cover light bulbs, electrical components and trimmed or installed tubing. BDS reserves the right to void all warranties if any product is installed by other than an authorized technician. BDS' warranty does not cover damage to any surface finish, including but not limited to, discoloration or abrasion from cleaners, disinfectants or light sources. No claim for labor or consequential damages will be allowed. Return items must include a copy of the invoice or packing slip as proof of purchase.

Beaverstate Dental Inc.
115 S. Elliott Rd.
Newberg, OR 97132
800-237-2303
503-538-8756
503-538-2845 Fax
www.beaverstatedental.com